ご使用のまえに

Ⅰ．はじめに

このパーツカタログは、表紙に記載しているエンジンに適用します。

Ⅱ．部品のご注文について

部品をご注文する際は、このパーツカタログのイラストとリストをご参照の上、
機種名・車台番号・E/G シリアル No.・部品番号・部品名称・必要数量等を
明確にご連絡下さい。

Ⅲ．パーツカタログの見方について

パーツカタログ上のイラストは、部品の「位置・形状」を、部品のご注文に際し、
支障のない範囲で示してありますので、必ずしも現品と一致いたしません。

1．リストの見方

下記、例示リストを参考に、ご理解願います。

③ ① ② ④ ⑤ ⑥ ⑧ ⑨ ⑩
○○○—□□□ ⑦

SYM BOL	PART NUMBER	PART NAME	UNIT Q'TY	SERIAL (A) (B)	N P D	REMARKS (A) (B) (C) (D)	REMARK
1A	YE1010102D26	OVERHAUL KIT	1	101－120		Y01	
B	YE1010102D27	OVERHAUL KIT	1	121－	B		
2A	YE1229834N00	GASKET	1	101－		Y02	
3A	YE1227943G00	SEAL,OIL	1	101－120			
B	YE1227943G10	SEAL,OIL	1	121－	B	WA1	
4A	YE1112110G00	GASKET	1	101－120			
B	YE1112110G10	GASKET	1	121－	B	A1	
41A	YE1446543G17	SEAL	3	101－		01 02	
42A	YE1446543G19	SEAL	2	101－		01 02	
51A	YE1351043G00	SEALOIL	1	101－		QK1	
61A	YE1303754T00	GASKET	1	101－		K1	
62A	YE1327054T01	GASKET	1	101－		K1	

○ 付き数字の内容は、次のとおりです。

① ○○○（機種コード）

パーツカタログの機種コード（本体機種名とは異なります）

② □□□（装置番号）

SECTION INDEX で索引する場合のキーとなります。

③ SYMBOL（照　号）

リストの通し番号です。

000A,000B 等、頭３桁が０（ゼロ）の場合は、その装置アッセンを表わします。

④ UNIT Q'TY（数　量）

１セット分の数量を表わします。

但し、照合 000A,000B 等の場合は１台分数を表わします。

A/R と記されている場合、必要な数量だけ使用する事を示します。

⑤ SERIAL(A)・SERIAL(B)（適用号機）

SERIAL(A) …… その部品が適用されている E/G の生産開始号機を示します。

SERIAL(B) …… その部品が適用されている E/G の生産終了号機を示します。

⑥ REMARKS 欄「N」（非販売品）

非販売品は「N」と記載しています。

⑦ REMARKS 欄「P」（部品互換性）

部品の互換性は「A」「B」「C」の記号で記載され、その内容は次のとおりです。

「A」　新部品と旧部品は相互で互換性有ります。　新部品 ○ ⇄ ○ 旧部品

「B」　新部品と旧部品は互換性が有りません。　新部品 × ⇄ × 旧部品

「C」　新部品は旧部品の代替品となります。　新部品 ○ ⇄ × 旧部品

但し、旧部品は新部品と互換性は有りません。

⑧ REMARKS 欄「D」（廃止・補給停止）

「D」……廃止を示します。

「H」……生産中止又は補給停止を示します。

但し、代替品は直下に記載しています。

⑨ REMARKS 欄「(A)」「(B)」「(C)」「(D)」

この欄には次の記号が入り、各記号の内容は次のとおりです。

(1) 親子関係部品

（a） 01～ …… Y01～ の「アッセン部品」の構成部品を表わします。

（b） Y01～ …… 01～ の部品を含んで構成されている「アッセン部品」を表わします。

【例１】（前頁リスト参照）

照号 1A　34256-20050 は、REMARKS 欄「(A)」に Y01 が記載されています。

これは、同欄に 01 が記載してある照号 41A・42A の部品を含んで構成されている

アッセン部品です。

(2) キット関係部品

（a） K1～ …… QK1～ の「キット部品」の構成部品を表わします。

（b） QK1～ …… K1～ の部品からなる「キット部品」を表わします。

(3) セット互換性部品

(a) A1～ ･････････ WA1～ の「セット互換部品」の構成部品を表わします。

(b) WA1～ ････････ A1～ の部品を１セットとする事により、互換性があることを表わします。但し、WA1～ 記してある部品のみでは、セット品を表わしていませんので、A1～ すべての部品を同時に要求して下さい。

⑩ REMARKS 欄

参考事項を記載しています。主な記載例は次の通りです。

(a) REF 152 … 装置番号 152 参照

(b)FR INLET… インレット側

(c)サイズ

D=60…φ60mm　　L=1225…長さ 1225mm

STD…スタンダードサイズ　　O.S.…オーバサイズ　　U.S…アンダーサイズ

(d)旧部品番号及び参考部品番号

Ⅳ. 補修用部品の供給年限について

本機に係る補修用部品の供給年限は、原則として、本機の生産中止年月より起算して１０年とします。

（ご注意）

- イラストに照合番号のないものは単品では販売できません。
- リストに照合番号のないものは単品では販売できません。
- 本カタログの記載部品は予告なしに、削除・変更・非販売とすることがありますのでご承知下さい。

Before Use

I. Introduction

This parts catalog is applied to models indicated on the cover.

II. How to Order Parts

When ordering a part, refer to illustrations and lists in this parts catalog, and clearly notify our company of the model name, the chassis No., the E/G serial No. ,the parts No., the parts name, the required quantity, etc.

III. How to Look at Parts Catalog

Illustrations in the parts catalog show the "position and shape" of each part in the range required in ordering. Accordingly, illustrations do not always agree with actual parts.

1. How to use the lists

The list shown below as an example helps you to understand how to use the lists.

③ ④ ⑤ ① ② OOO—□□□ ⑥ ⑦ ⑧ ⑨ ⑩ ⑪ ⑫

SYM BOL	PART NUMBER	PART NAME	UNIT Q'TY	SERIAL (A) (B)	N P D	REMARKS (A) (B) (C) (D)	REMARK
1A	YE1010102D26	OVERHAUL KIT	1	101—120		Y01	
B	YE1010102D27	OVERHAUL KIT	1	121—	B		
2A	YE1229834N00	GASKET	1	101—		Y02	
3A	YE1227943G00	SEAL,OIL	1	101—120			
B	YE1227943G10	SEAL,OIL	1	121—	B	WA1	
4A	YE1112110G00	GASKET	1	101—120			
B	YE1112110G10	GASKET	1	121—	B	A1	
41A	YE1446543G17	SEAL	3	101—		01 02	
42A	YE1446543G19	SEAL	2	101—		01 02	
51A	YE1351043G00	SEALOIL	1	101—		QK1	
61A	YE1303754T00	GASKET	1	101—		K1	
62A	YE1327054T01	GASKET	1	101—		K1	

Encircled numbers indicate the following contents:

① OOO (MODEL CODE)
Model code shown in the parts catalog (which is different from the model name of the main unit)

② □□□ (SECTION NO.)
Key in retrieval in "SECTION INDEX"

③ SYMBOL
Key to find a parts No. from an illustration (unit drawing)
The symbol to which three zeros are prefixed, e.g., 000A, 000B, etc. tells that the unit is an assembly.

④ PART NUMBER

⑤ PART NAME

⑥ UNIT Q'TY

This column indicates the quantity of one set

⑦ SERIAL(A) • SERIAL(B) (applicable chassis Nos.)

SERIAL(A) : Indicates the application start chassis No.

SERIAL(B) : Indicates the application end chassis No.

⑧ REMARKS: [N] (not for sale)

Parts not for sale are indicated as "N".

⑨ REMARKS: [P] (parts compatibility)

The parts compatibility is indicated in symbols, A, B and C having the following meanings:

[A] A new part and an old part are completely interchangeable with each other.

New ⇄ Old (○ / ○)

[B] A new part and an old part are not interchangeable with each other.

New ⇄ Old (× / ×)

[C] A new part is an alternative of an old part. In this case, an old part is not interchangeable with a new part.

New → Old (○ / ×)

⑩ REMARKS: [D]

[D] Indicates that the part is deleted.

[H] Indicates that production or supply of the part is stopped. An alternative is shown just below.

⑪ REMARKS: [(A)], [(B)], [(C)], [(D)]

Symbols indicated in this column have the following meanings.

(1) Assembly parts

(a) 01 - : Indicates parts which make up the assembly parts.

(b) Y01 - : Indicates assembly parts which is made up of the parts K1,K2-K9.

[Example 1] (Refer to the list in the previous page.)

The part 1A 34256-20050 front chassis has Y01 in the Remarks column, it means that the Front chassis includes the parts with 01[41A and 42A] in the Remarks column.

(2) Kit parts

(a) K1 - : Indicates parts which make up the kit.

(b) QK1 - : Indicates a kit which is made up of parts K1 -, K2 -.

(3) Parts which has a interchangeability when replace with the other related parts.
(a) A1 - : Indicates parts which need to make a interchangeability.
(b) WA1~ : Indicates parts which have a interchangeability when replace with A1 parts.
[Example 2] (Refer to the list in the previous page.)
The part 3B 44344-70020 [WA1] can replace the old part 3A 44340-70210 only if the plate 4B 41605-41290 [A1] is also replaced together.

⑫ REMARKS

The other major remarks are shown below:

(1) REF 618 : Indicates the section No. 618.
(2) FR LH : Indicates the left side toward the machine forward direction.
(3) FR RH : Indicates the right side toward the machine forward direction.
(4) FR INLET : Indicates the inlet side.
(5) D80×185L : Indicates "diameter = 80 mm, length = 185 mm".
(6) Old parts No. • reference parts No., etc.
(7) SIZE : S.T.D. ---- Standard size
O.S. ---- Over size
U.S. ---- Under size

(Note)

The parts not numbered individually in the illustration will not be sold separately.
The parts which parts number is not listed individually will not be sold separately.

Parts shown in this catalog may be deleted, changed or specified as "not for sale" without prior notice.

WARNING :

1. The purpose in issuing this parts catalog is to use for clarifying the parts and for placing the parts order to your Kawasaki loader dealer or the engine manufacture.

2. You also can use this parts catalog to exchange parts information between you and your Kawasaki loader dealer or engine manufacture for clarifying the parts.

3. You must not perform any repair, disassembly and reassembly work on the machine.
Contact your Kawasaki loader dealer or engine manufacture and ask him to do the above work.

EB3

SYSTEM CODE	SYSTEM NAME	PAGE
005	ENGINE GASKET KIT	005-1
010	CYLINDER HEAD COVER	010-1
011	CYLINDER HEAD	011-1
012	CYLINDER BLOCK	012-1
013	OIL PAN & LEVEL GAUGE	013-1
014	CAMSHAFT & VALVE	014-1
015	CRANKSHAFT, PISTON & FLYWHEEL	015-1
020	TIMING GEAR CASE & FLYWHEEL HOUSING	020-1
025	INLET MANIFOLD	025-1
027	EXHAUST MANIFOLD	027-1
028	VENTILATION SYSTEM	028-1
030	WATER PUMP & CORROSION RESISTOR	030-1
031	THERMOSTAT & HOUSING	031-1
032	WATER PIPING, ENGINE	032-1
033	FAN & FAN BELT	033-1
036	TURBOCHARGER SYSTEM	036-1
037	TURBOCHARGER	037-1
040	FUEL INJECTION SYSTEM	040-1
041	FUEL FILTER & BRACKET	041-1

SYSTEM CODE	SYSTEM NAME	PAGE
042	FUEL PUMP & PIPE	042-1
050	OIL COOLER & OIL FILTER	050-1
051	OIL PUMP & OIL STRAINER	051-1
052	OIL & VACUUM PIPING, ENGINE	052-1
060	ENGINE ELECTRICAL CONTROL PARTS	060-1
065	STARTER	065-1
066	GENERATOR	066-1
080	INJECTION PUMP	080-1
081	GOVERNOR, INJECTION PUMP	081-1
084	FEED PUMP, INJECTION PUMP	084-1
086	MISCELLANEOUS PARTS, INJECTION PUMP	086-1
087	COUPLING, INJECTION PUMP	087-1
145	WATER SEDIMENTER, FUEL	145-1

MEMO

0-05	ENGINE GASKET KIT
FIG-NO.	

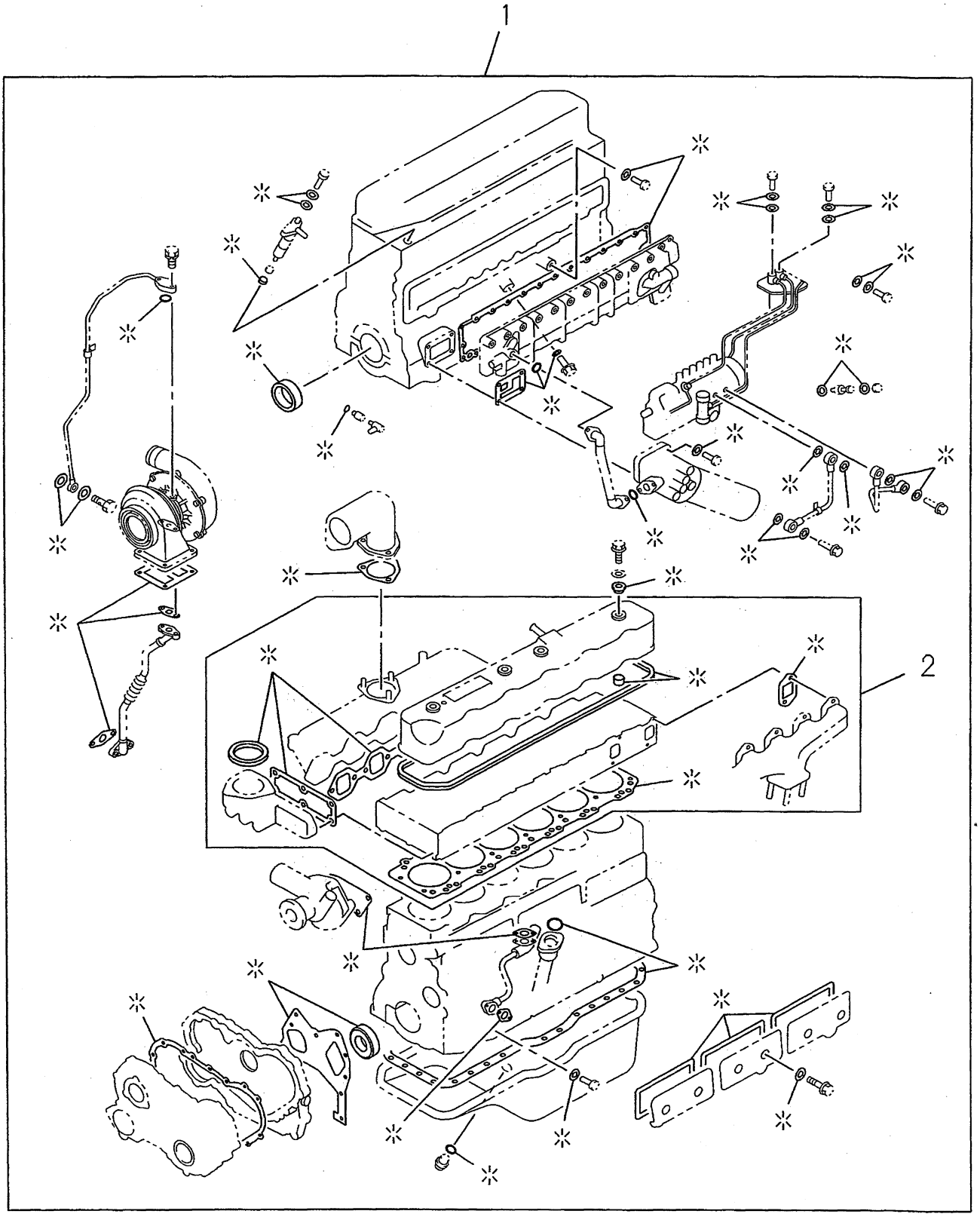

005A0110932

SYM BOL	PART NUMBER	PART NAME	UNIT Q,TY	SERIAL (A) - (B)	REMARKS N P D	(A)	(B)	(C) (D)	REMARK
1A	YZ1878123112	ｶﾞｽｹｯﾄ ｷｯﾄ GASKET KIT	1	154749-		Y01			YZ1878123111
2A	YZ1878122712	ｶﾞｽｹｯﾄ ｷｯﾄ GASKET KIT	1	154749-		01			YZ1878122711

0-10	CYLINDER HEAD COVER
FIG-NO.	

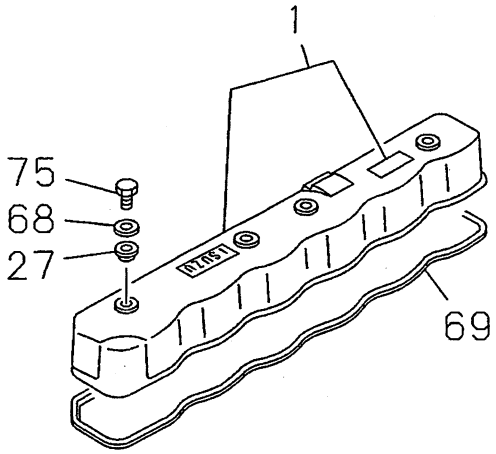

010A0110932

SYM BOL	PART NUMBER	PART NAME	UNIT Q,TY	SERIAL (A) - (B)	REMARKS N P D	(A) (B)	(C) (D)	REMARK
1A	YZ1111713581	ｶﾊﾞｰ,ﾍｯﾄﾞ COVER,HEAD	1	154749-				
27A	YZ9111790300	ﾊﾟｯｷﾝ PACKING	4	154749-				
68A	YZ9111791050	ﾜｯｼｬ,ﾌﾟﾚｰﾝ WASHER,PLANE	4	154749-				
69A	YZ1111730590	ﾊﾟｯｷﾝ PACKING	1	154749-				
75A	YZ9111750110	ﾅｯﾄ NUT	4	154749-				

0-11	CYLINDER HEAD
FIG-NO.	

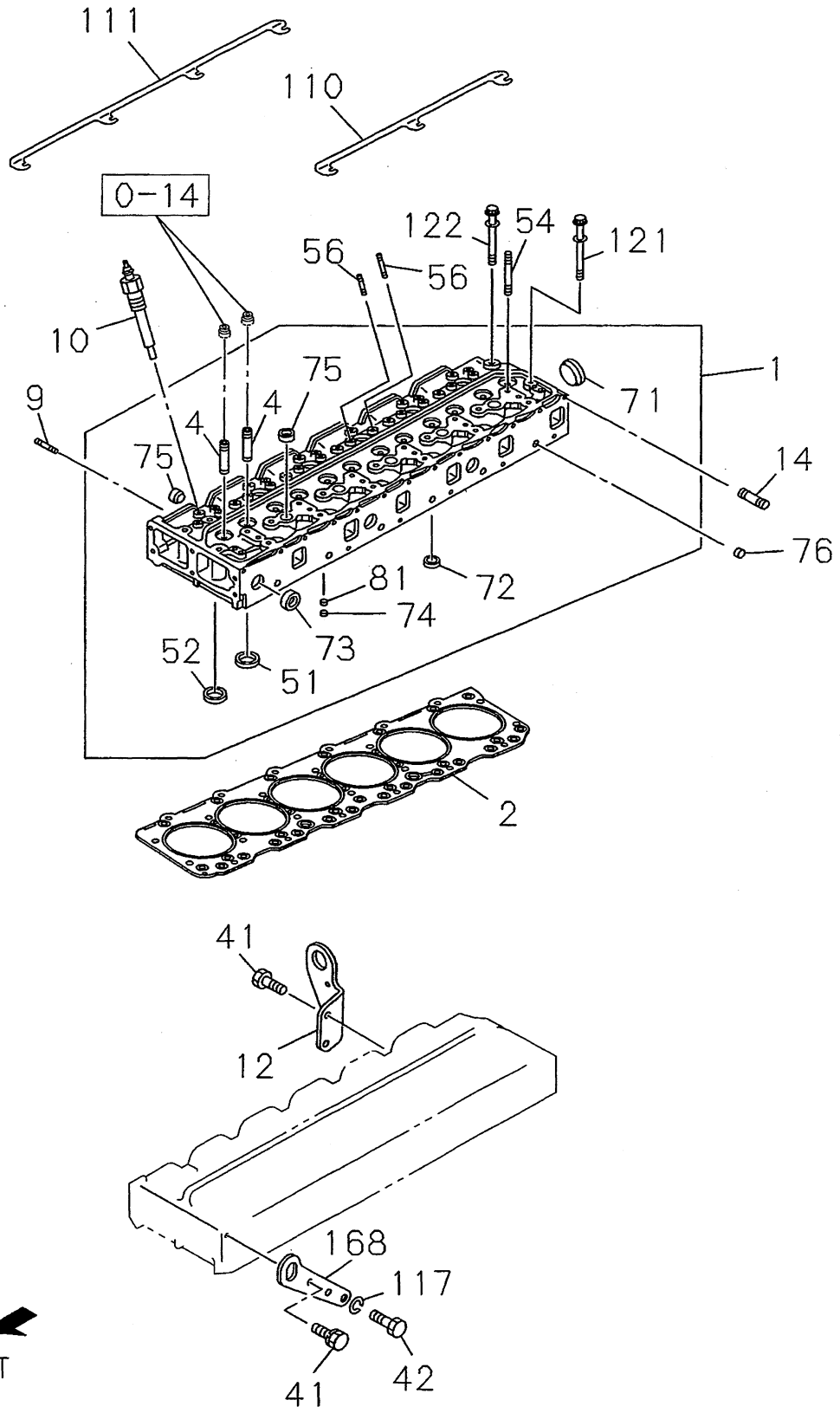

011A0110932

SYM BOL	PART NUMBER	PART NAME	UNIT Q,TY	SERIAL (A) - (B)	REMARKS N P D	(A)	(B)	(C)	(D)	REMARK
1A	YZ1111109060	ﾍｯﾄﾞ ｱｯｾﾝ,ｼﾘﾝﾀﾞ HEAD ASSY,CYLINDER	1	154749-		Y01				
2A	YZ1111411961	ｶﾞｽｹｯﾄ GASKET	1	154749-						
4A	YZ5117210010	ｶﾞｲﾄﾞ,ﾊﾞﾙﾌﾞ GUIDE,VALVE	12	154749-		01				
9A	YZ9041108250	ﾎﾞﾙﾄ,ｽﾀｯﾄﾞ BOLT,STUD	6	154749-						M8X25
10A	YZ1825130431	ﾌﾟﾗｸﾞ,ｸﾞﾛｰ PLUG,GLOW	6	154749-						
12A	YZ9117776121	ﾊﾝｶﾞ HANGER	1	154749-						
14A	YZ9096300260	ﾎﾞﾙﾄ,ｽﾀｯﾄﾞ BOLT,STUD	12	154749-						M8X86
41A	YZ0286810200	ﾎﾞﾙﾄ BOLT	3	154749-						M10X20
42A	YZ0208014250	ﾎﾞﾙﾄ BOLT	1	154749-						M14X25
51A	YZ8970376860	ｲﾝｻｰﾄ,ﾊﾞﾙﾌﾞ INSERT,VALVE	6	154749-		01				INLET
52A	YZ5117110280	ｲﾝｻｰﾄ,ﾊﾞﾙﾌﾞ INSERT,VALVE	6	154749-		01				EXHAUST
54A	YZ9098301630	ﾎﾞﾙﾄ,ｽﾀｯﾄﾞ BOLT,STUD	4	154749-						M8X83
56A	YZ1093000180	ﾎﾞﾙﾄ,ｽﾀｯﾄﾞ BOLT,STUD	12	154749-						M8X40
71A	YZ1096000051	ｶｯﾌﾟ,ｼｰﾘﾝｸﾞ CUP,SEALING	1	154749-		01				D=45
72A	YZ9111291280	ｶｯﾌﾟ,ｼｰﾘﾝｸﾞ CUP,SEALING	3	154749-		01				D=20
73A	YZ5112190150	ｶｯﾌﾟ,ｼｰﾘﾝｸﾞ CUP,SEALING	3	154749-		01				D=32
74A	YZ5096000130	ｶｯﾌﾟ,ｼｰﾘﾝｸﾞ CUP,SEALING	6	154749-		01				D=12.3
75A	YZ1096000160	ｶｯﾌﾟ,ｼｰﾘﾝｸﾞ CUP,SEALING	11	154749-		01				D=25
76A	YZ9111296010	ｶｯﾌﾟ,ｼｰﾘﾝｸﾞ CUP,SEALING	5	154749-						D=12.5
81A	YZ9096600340	ﾌﾟﾗｸﾞ PLUG	6	154749-		01				D=11.9
110A	YZ5197320012	ｺﾈｸﾀ CONNECTOR	1	154749-						L=236
111A	YZ5197320022	ｺﾈｸﾀ CONNECTOR	1	154749-						L=354
117A	YZ9091505140	ﾜｯｼｬ,ｽﾌﾟﾘﾝｸﾞ WASHER,SPRING	1	154749-						
121A	YZ1090701010	ﾎﾞﾙﾄ BOLT	20	154749-						M12X113
122A	YZ1090701001	ﾎﾞﾙﾄ(ﾜｯｼｬ ﾂｷ) BOLT,W/WASHER	6	154749-						M12X100
168A	YZ5117770551	ﾊﾝｶﾞ HANGER	1	154749-						YZ1117771060

0-12	CYLINDER BLOCK
FIG-NO.	(NO.1)

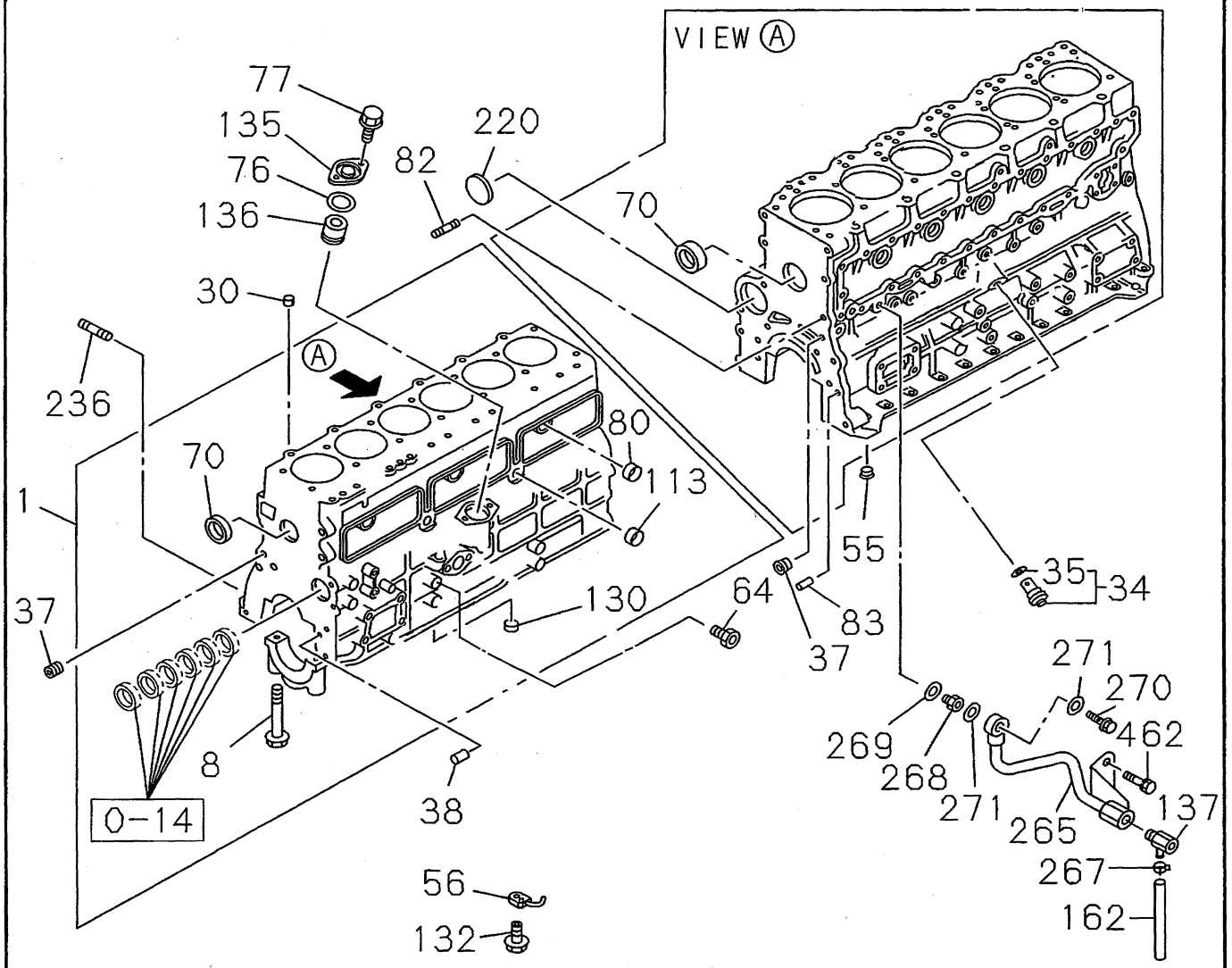

012A0110932

CYLINDER BLOCK

(NO.2)

0-12

FIG-NO.

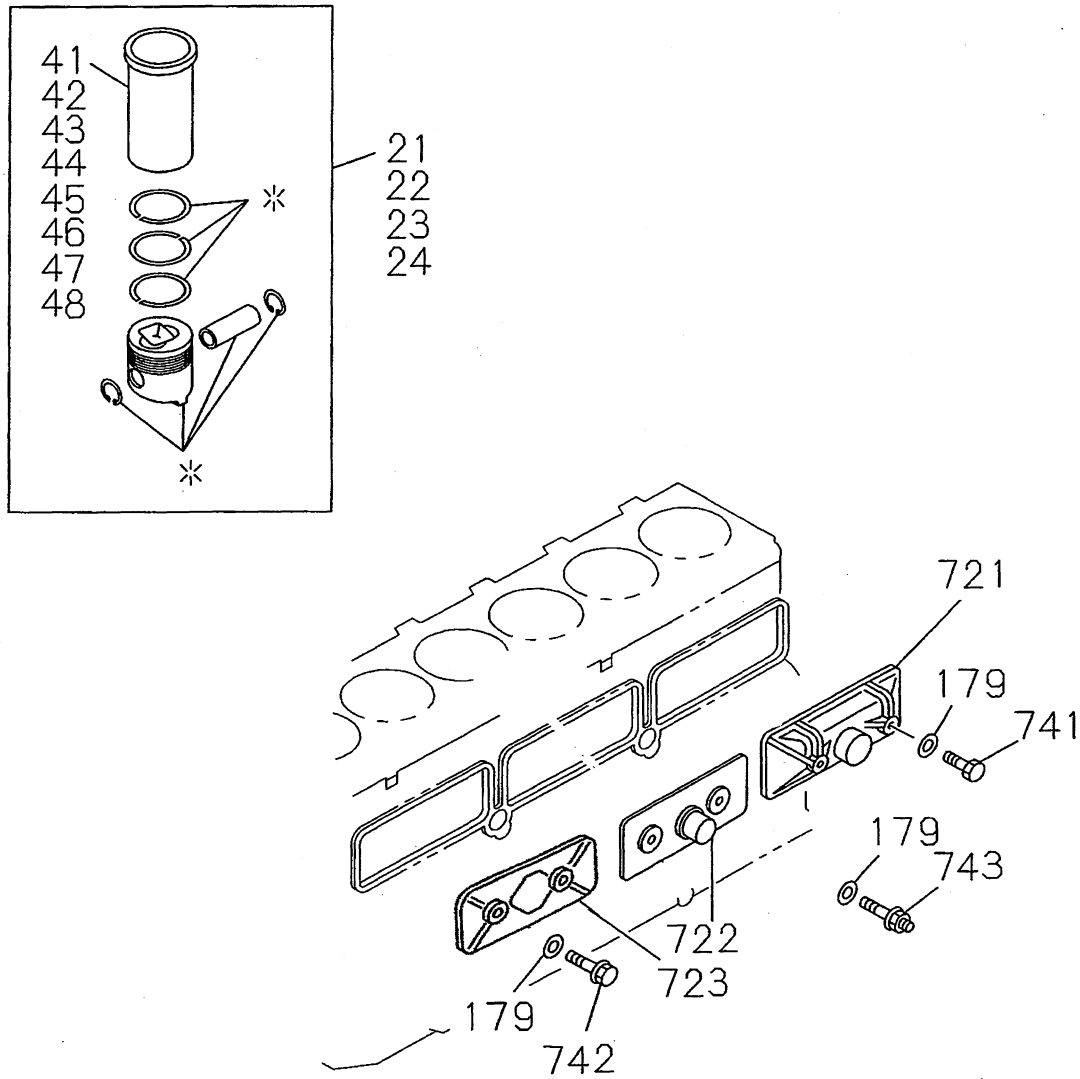

012A0210932

SYM BOL	PART NUMBER	PART NAME	UNIT Q,TY	SERIAL (A) - (B)	REMARKS N P D	(A)	(B)	(C)	(D)	REMARK
1A	YZ1112104437	ﾌﾞﾛｯｸ ｱｯｾﾝ,ｼﾘﾝﾀﾞ BLOCK ASSY,CYLINDER	1	154749-		Y01				
8A	YZ1090004692	ﾎﾞﾙﾄ BOLT	14	154749-		01				M16X119
21A	YZ1878124850	ﾗｲﾅ ｾｯﾄ LINER SET	6	154749-			Y02			GRD=1(YZ1878121
22A	YZ1878124860	ﾗｲﾅ ｾｯﾄ LINER SET	6	154749-				Y03		GRD=2(YZ1878121
23A	YZ1878124870	ﾗｲﾅ ｾｯﾄ LINER SET	6	154749-					Y04	GRD=3(YZ1878121
24A	YZ1878124880	ﾗｲﾅ ｾｯﾄ LINER SET	6	154749-		Y05				GRD=4(YZ1878121
30A	YZ8941480790	ﾀﾞｳｴﾙ DOWEL	2	154749-						
34A	YZ8970233390	ﾊﾞﾙﾌﾞ,ﾘﾘｰﾌ VALVE,RELIEF	1	154749-			Y06			
35A	YZ5096230350	ﾘﾝｸﾞ,O RING,O	1	154749-			06			
37A	YZ1096050681	ﾌﾟﾗｸﾞ PLUG	2	154749-						
38A	YZ1097400780	ﾋﾟﾝ PIN	1	154749-						
41A	YZ1112613820	ﾗｲﾅ,ｼﾘﾝﾀﾞ LINER,CYLINDER	1	154749-			02			GRADE=AX
42A	YZ1112613830	ﾗｲﾅ LINER	1	154749-			02			GRADE=CX
43A	YZ1112613840	ﾗｲﾅ,ｼﾘﾝﾀﾞ LINER,CYLINDER	1	154749-				03		GRADE=AX
44A	YZ1112613850	ﾗｲﾅ,ｼﾘﾝﾀﾞ LINER,CYLINDER	1	154749-				03		GRADE=CX
45A	YZ1112613860	ﾗｲﾅ,ｼﾘﾝﾀﾞ LINER,CYLINDER	1	154749-					04	GRADE=AX
46A	YZ1112613870	ﾗｲﾅ LINER	1	154749-					04	GRADE=CX
47A	YZ1112613880	ﾗｲﾅ,ｼﾘﾝﾀﾞ LINER,CYLINDER	1	154749-		05				GRADE=AX
48A	YZ1112613890	ﾗｲﾅ LINER	1	154749-		05				GRADE=CX
55A	YZ1096050660	ﾌﾟﾗｸﾞ PLUG	1	154749-						
56A	YZ1133421320	ｼﾞｪｯﾄ,ｵｲﾙ JET,OIL	6	154749-						
64A	YZ1096601010	ｺﾈｸﾀ CONNECTOR	1	154749-						
70A	YZ1096000520	ｶｯﾌﾟ,ｼｰﾘﾝｸﾞ CUP,SEALING	2	154749-		01				
76A	YZ1096234650	ﾘﾝｸﾞ,O RING,O	1	154749-						
77A	YZ0501408220	ﾎﾞﾙﾄ BOLT	2	154749-						M8X22
80A	YZ1096000121	ｶｯﾌﾟ,ｼｰﾘﾝｸﾞ CUP,SEALING	3	154749-		01				
82A	YZ5093000231	ﾎﾞﾙﾄ,ｽﾀｯﾄﾞ BOLT,STUD	1	154749-						M14X44
83A	YZ9081510180	ﾋﾟﾝ ,ｽﾄﾚｰﾄ PIN,STRAIGHT	2	154749-						
113A	YZ5112190140	ｶｯﾌﾟ,ｼｰﾘﾝｸﾞ CUP,SEALING	2	154749-		01				
130A	YZ5112570011	ﾀﾞｳｴﾙ DOWEL	1	154749-		01				
132A	YZ1131610120	ﾊﾞﾙﾌﾞ ｱｯｾﾝ VALVE ASSY	6	154749-						
135A	YZ1112191291	ｶﾊﾞｰ COVER	1	154749-						
136A	YZ9112246021	ﾌﾞｯｼﾝｸﾞ BUSHING	1	154749-						
137A	YZ1096800240	ｺｯｸ,ﾄﾞﾚﾝ COCK,DRAIN	1	154749-						
162A	YZ9099147010	ﾊﾟｲﾌﾟ ｱｯｾﾝ PIPE ASSY	1	154749-						
179A	YZ9095720080	ﾊﾟｯｷﾝ PACKING	6	154749-						

SYM BOL	PART NUMBER	PART NAME	UNIT Q,TY	SERIAL (A) - (B)	REMARKS N P D	(A) (B) (C) (D)	REMARK
220A	YZ9098600190	ﾌﾟﾗｸﾞ PLUG	1	154749-			
236A	YZ1093000761	ﾎﾞﾙﾄ,ｽﾀｯﾄﾞ BOLT,STUD	1	154749-			M10X30
265A	YZ1137213412	ﾊﾟｲﾌﾟ,ﾄﾞﾚﾝ PIPE,DRAIN	1	154749-			
267A	YZ8970157541	ｸﾘｯﾌﾟ CLIP	1	154749-			
268A	YZ5096660021	ﾆｯﾌﾟﾙ NIPPLE	1	154749-			
269A	YZ1096301150	ｶﾞｽｹｯﾄ GASKET	1	154749-			
270A	YZ1096750860	ﾎﾞﾙﾄ,ｼﾞｮｲﾝﾄ BOLT,JOINT	1	154749-			
271A	YZ1096300850	ﾊﾟｯｷﾝ PACKING	2	154749-			
462A	YZ0286810200	ﾎﾞﾙﾄ BOLT	2	154749-			
721A	YZ1112902541	ｶﾊﾞｰ COVER	1	154749-			
722A	YZ8973010630	ｶﾊﾞｰ COVER	1	154749-			YZ1112911010
723A	YZ8972221041	ｶﾊﾞｰ COVER	1	154749-			
741A	YZ1090520221	ﾎﾞﾙﾄ BOLT	2	154749-			M8X84
742A	YZ8943675301	ﾎﾞﾙﾄ BOLT	3	154749-			M8X56
743A	YZ1090520181	ﾎﾞﾙﾄ BOLT	1	154749-			M8X57

0-13	OIL PAN AND LEVEL GAUGE
FIG-NO.	(NO.1) (NO.2)

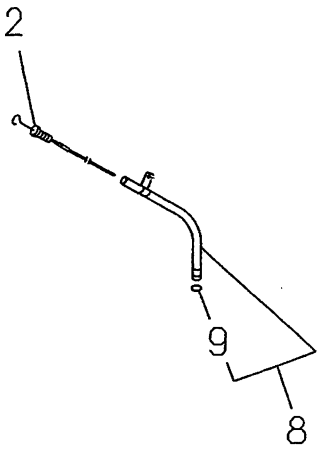

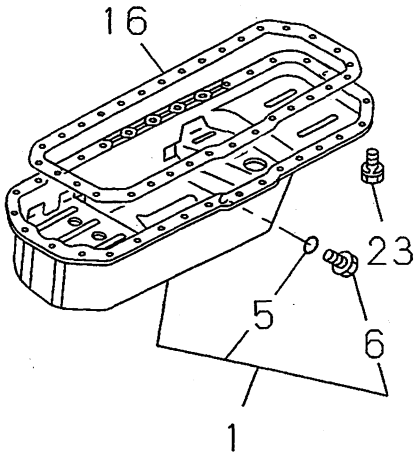

013A0110932
013A0210932

SYM BOL	PART NUMBER	PART NAME	UNIT Q,TY	SERIAL (A) - (B)	REMARKS N P D	(A)	(B)	(C) (D)	REMARK
1A	YZ1113604392	ﾊﾟﾝ,ｵｲﾙ PAN,OIL	1	154749-		Y01			
2A	YZ1117602802	ｹﾞｰｼﾞ ｱｯｾﾝ,ﾚﾍﾞﾙ GAUGE ASSY,LEVEL	1	154749-					
5A	YZ1096231790	ﾘﾝｸﾞ,O RING,O	1	154749-		01			
6A	YZ1096040220	ﾌﾟﾗｸﾞ PLUG	1	154749-		01			
8A	YZ1117662741	ﾁｭｰﾌﾞ TUBE	1	154749-			Y02		
9A	YZ5096230020	ﾘﾝｸﾞ,O RING,O	1	154749-			02		
16A	YZ1113671320	ｶﾞｽｹｯﾄ GASKET	1	154749-					YZ1113671000
23A	YZ0500408180	ﾎﾞﾙﾄ(ﾜｯｼｬ ﾂｷ) BOLT,W/WASHER	32	154749-					M8X18

0-14	CAMSHAFT AND VALVE
FIG-NO.	(NO.1)

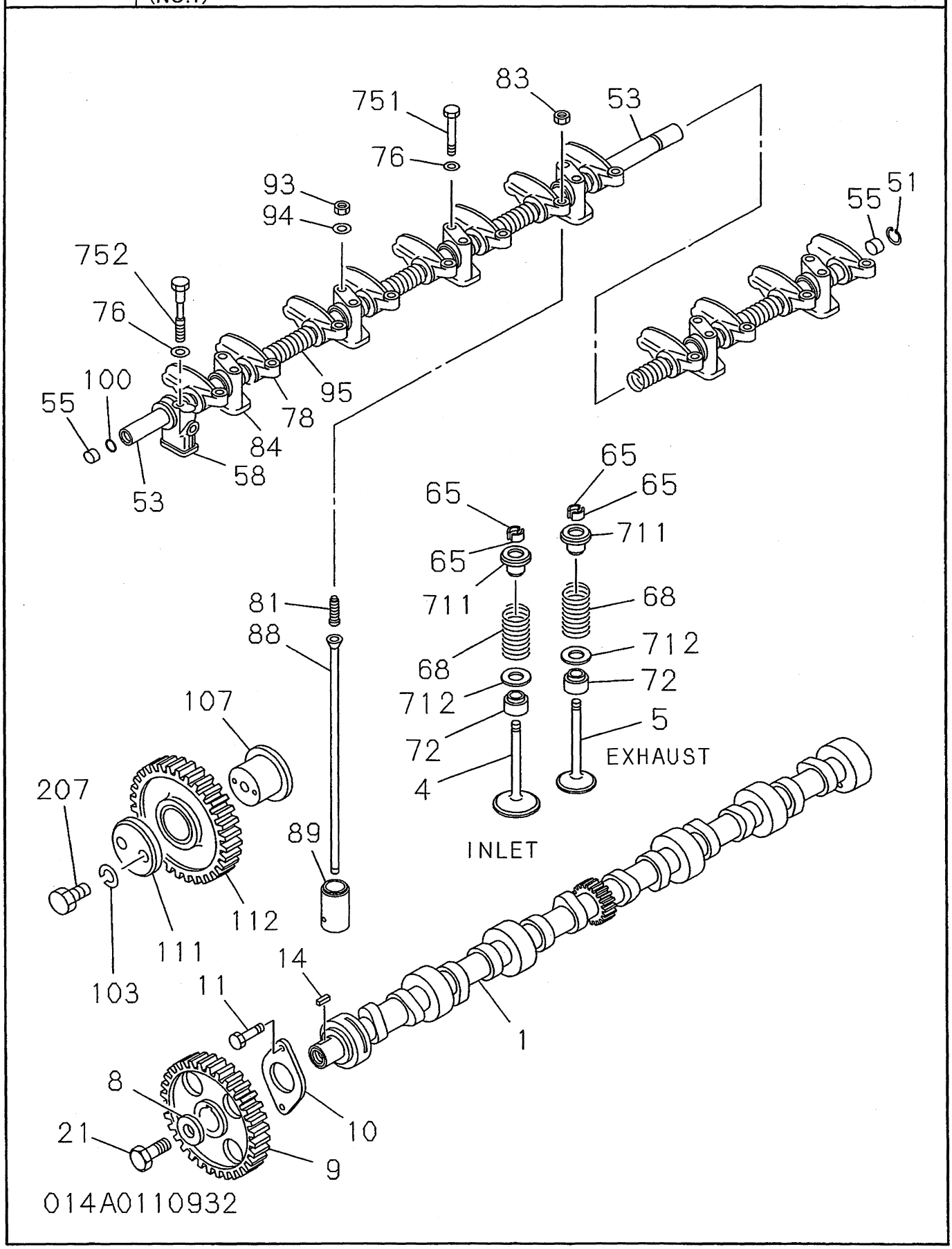

CAMSHAFT AND VALVE

(NO.2)

0-14

FIG-NO.

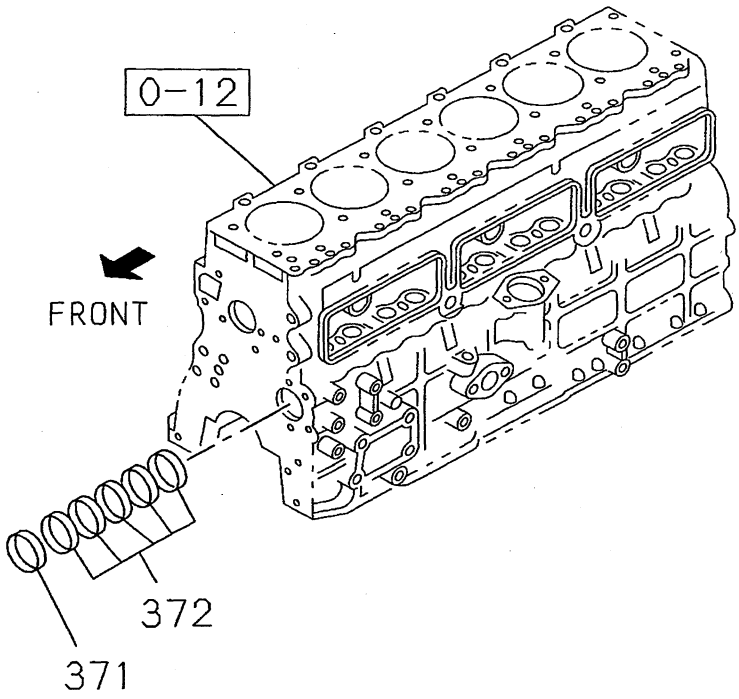

014A0210932

SYM BOL	PART NUMBER	PART NAME	UNIT Q,TY	SERIAL (A) - (B)	REMARKS N P D	(A) (B)	(C) (D)	REMARK
1A	YZ1125140100	カムシャフト CAMSHAFT	1	154749-				YZ1125140050
4A	YZ1125511650	バルブ VALVE	6	154749-				INLET
5A	YZ1125521110	バルブ VALVE	6	154749-				EXHAUST
8A	YZ9098518503	ワッシャ WASHER	1	154749-				
9A	YZ1125220162	ギア GEAR	1	154749-				
10A	YZ9116810150	プレート PLATE	1	154749-				
11A	YZ0500408250	ボルト(ワッシャ ツキ) BOLT,W/WASHER	2	154749-				M8X25
14A	YZ9080307130	キー KEY	1	154749-				
21A	YZ9920614280	ボルト BOLT	1	154749-				M14X28
51A	YZ9091800190	リング,スナップ RING,SNAP	1	154749-				
53A	YZ1126210940	シャフト SHAFT	1	154749-				
55A	YZ9126260050	プラグ PLUG	2	154749-				
58A	YZ5126280120	ブラケット BRACKET	1	154749-				
65A	YZ5125650060	カラー COLLAR	24	154749-				
68A	YZ1125610991	スプリング SPRING	12	154749-				YZ1125610990
72A	YZ8971201670	シール SEAL	12	154749-				
76A	YZ9098514300	ワッシャ,プレーン WASHER,PLANE	9	154749-				
78A	YZ1126112490	アーム,ロッカ ARM,ROCKER	12	154749-				
81A	YZ9126160420	スクリュウ,アジャスト SCREW,ADJUST	12	154749-				
83A	YZ9091115080	ナット NUT	12	154749-				M8
84A	YZ9126281050	ブラケット BRACKET	6	154749-				
88A	YZ1125750360	ロッド,プッシュ ROD,PUSH	12	154749-				
89A	YZ5125710033	タペット TAPPET	12	154749-				YZ5125710032
93A	YZ1094001160	ナット NUT	4	154749-				
94A	YZ9098514300	ワッシャ,プレーン WASHER,PLANE	4	154749-				
95A	YZ1095803350	スプリング SPRING	5	154749-				
100A	YZ5096230600	リング,O RING,O	1	154749-				
103A	YZ9091505100	ワッシャ,スプリング WASHER,SPRING	2	154749-				
107A	YZ9125310300	シャフト SHAFT	1	154749-				
111A	YZ5125350011	カラー COLLAR	1	154749-				
112A	YZ8941339373	ギア,アイドル GEAR,IDLE	1	154749-				
207A	YZ0108110550	ボルト BOLT	2	154749-				M10X55
371A	YZ9116910480	メタル,シエル METAL,SHELL	1	154749-				
372A	YZ9116930350	メタル,シエル METAL,SHELL	5	154749-				
711A	YZ8941145790	シート,スプリング SEAT,SPRING	12	154749-				UPPER
712A	YZ5125630010	シート,スプリング SEAT,SPRING	12	154749-				LOWER

SYM BOL	PART NUMBER	PART NAME	UNIT Q,TY	SERIAL (A) - (B)	REMARKS N P D	(A) (B)	(C) (D)	REMARK
751A	YZ1090005670	ﾎﾞﾙﾄ BOLT	8	154749-				M8X65
752A	YZ9096021480	ﾎﾞﾙﾄ BOLT	1	154749-				M8X65

0-15	CRANKSHAFT,PISTON AND FLYWHEEL
FIG-NO.	

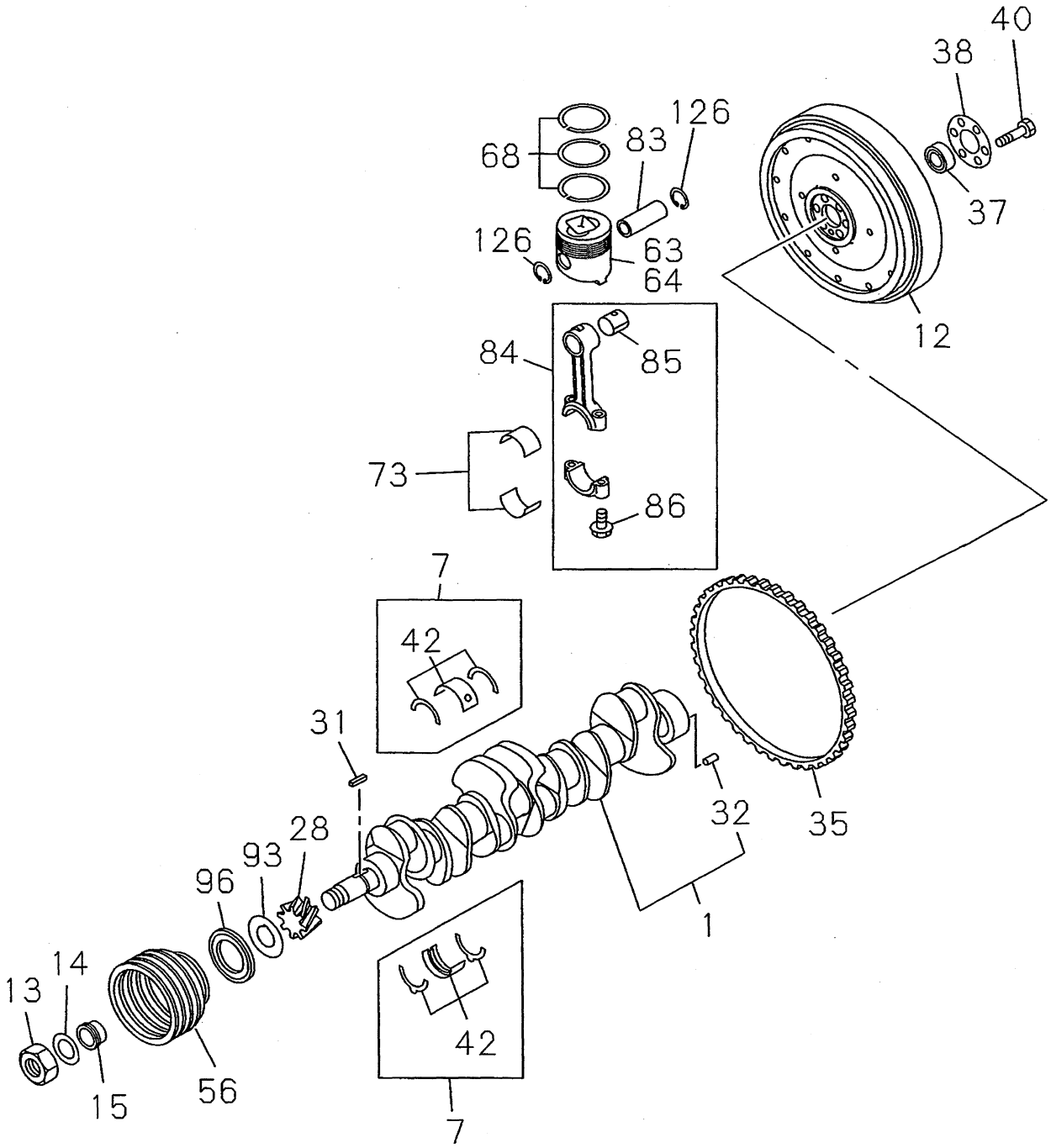

015A0110932

SYM BOL	PART NUMBER	PART NAME	UNIT Q,TY	SERIAL (A) - (B)	REMARKS N P D	(A)	(B)	(C)	(D)	REMARK
1A	YZ1123104700	クランクシャフト CRANKSHAFT	1	154749-		Y01				
7A	YZ1115100743	メタル キット,シエル METAL KIT,SHELL	1	154749-			Y02			
12A	YZ5123310646	フライホイール FLYWHEEL	1	154749-						
13A	YZ9098401071	ナット NUT	1	154749-						
14A	YZ9098514310	ワッシャ,プレーン WASHER,PLANE	1	154749-						
15A	YZ9123790450	ブッシング BUSHING	1	154749-						
28A	YZ8971379101	ギア GEAR	1	154749-						
31A	YZ5097380010	キー KEY	1	154749-						
32A	YZ9081512200	ピン PIN	1	154749-		01				
35A	YZ8943931320	ギア,リング GEAR,RING	1	154749-						
37A	YZ1098002140	ベアリング,ボール BEARING,BALL	1	154749-						
38A	YZ5123360081	ワッシャ WASHER	1	154749-						
40A	YZ9098013340	ボルト BOLT	6	154749-						
42A	YZ1116800013	ワッシャ,スラスト WASHER,THRUST	2	154749-			02			
56A	YZ1123714880	プーリ PULLEY	1	154749-						YZ1123712480
63A	YZ8973585740	ピストン PISTON	6	154749-						GR=AX(YZ8972873
64A	YZ8973585750	ピストン PISTON	6	154749-						GR=CX(YZ8972874
68A	YZ1121211460	リング セット,ピストン RING SET,PISTON	6	154749-						
73A	YZ9122716080	メタル セット,シエル METAL SET,SHELL	6	154749-						
83A	YZ1122110332	ピン,ピストン PIN,PISTON	6	154749-						YZ9122116041
84A	YZ1122301291	ロッド アッセン,コネクテイング ROD ASSY,CONNECTING	6	154749-				Y03		
85A	YZ1122510320	ブッシング BUSHING	1	154749-				03		
86A	YZ1122350271	ボルト BOLT	2	154749-				03		M20X49.5
93A	YZ1123620031	スロワ,オイル THROWER,OIL	1	154749-						
96A	YZ5123620031	スロワ,ダスト THROWER,DUST	1	154749-						
126A	YZ8941075751	リング,スナップ RING,SNAP	12	154749-						

0-20	TIMING GEAR CASE AND FLYWHEEL HOUSING
FIG-NO.	(NO.1)(NO.2)(NO.4)

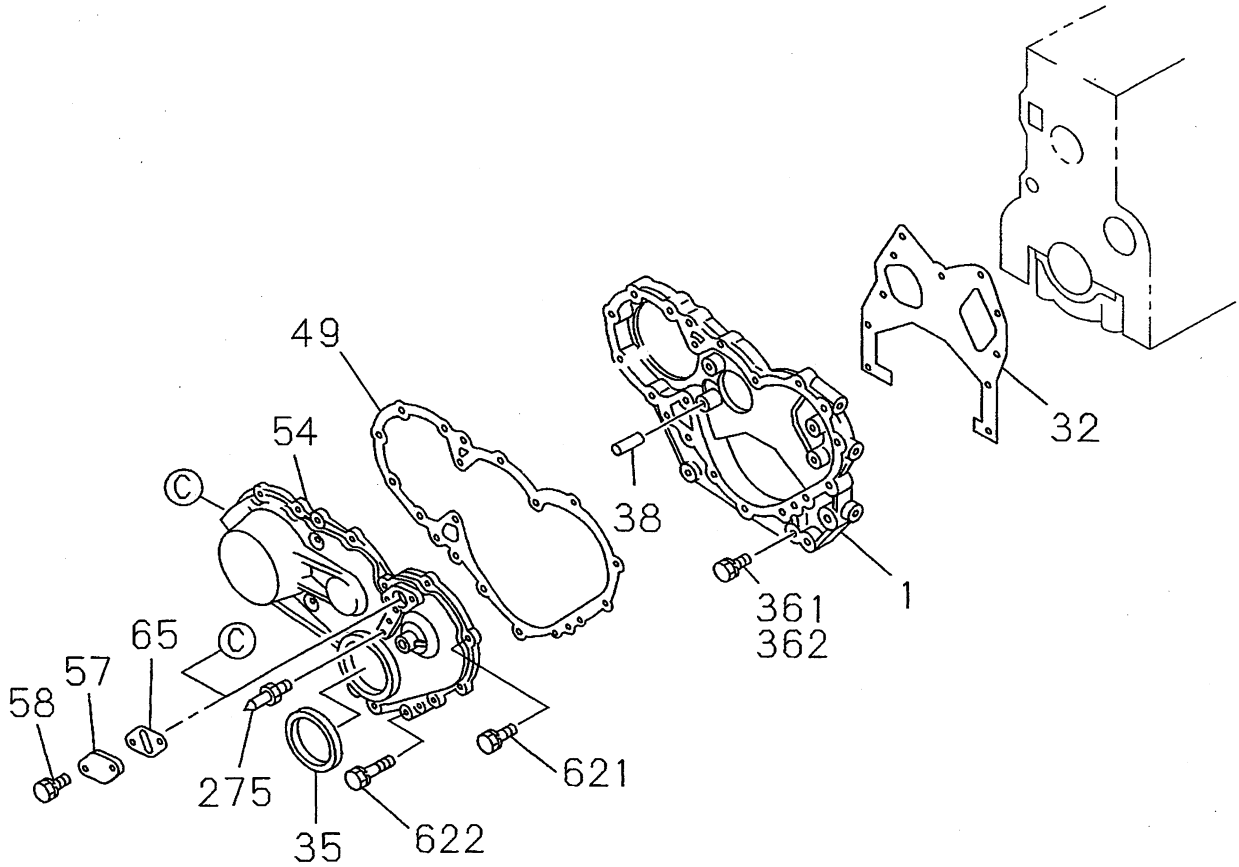

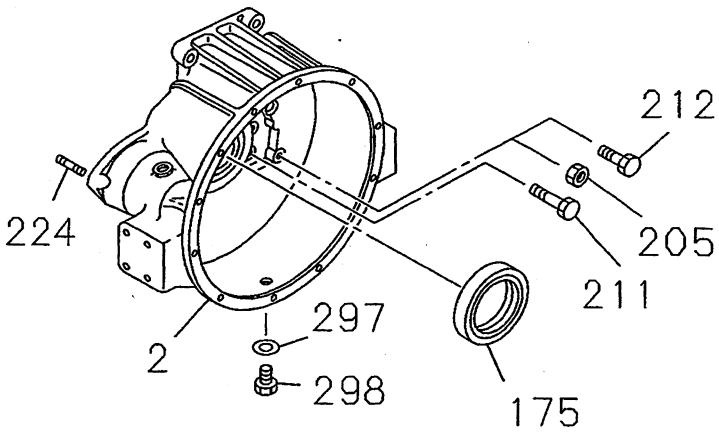

020A0110932
020A0210932
020A0410932

SYM BOL	PART NUMBER	PART NAME	UNIT Q,TY	SERIAL (A) - (B)	REMARKS N P D	(A) (B)	(C) (D)	REMARK
1A	YZ5113110113	ｹｰｽ,ｷﾞｱ CASE,GEAR	1	154749-				
2A	YZ8972290750	ﾊｳｼﾞﾝｸﾞ,ﾌﾗｲﾎｲｰﾙ HOUSING,FLYWHEEL	1	154749-				YZ1113415820
32A	YZ8943706710	ﾊﾟｯｷﾝ PACKING	1	154749-				
35A	YZ1096254380	ｼｰﾙ,ｵｲﾙ SEAL,OIL	1	154749-				
38A	YZ9081510180	ﾋﾟﾝ ,ｽﾄﾚｰﾄ PIN,STRAIGHT	1	154749-				
49A	YZ1113220600	ｶﾞｽｹｯﾄ GASKET	1	154749-				
54A	YZ1113210790	ｶﾊﾞｰ COVER	1	154749-				
57A	YZ5113210090	ｶﾊﾞｰ COVER	2	154749-				
58A	YZ0280806120	ﾎﾞﾙﾄ BOLT	4	154749-				M6X12
65A	YZ8970276011	ﾊﾟｯｷﾝ PACKING	2	154749-				
175A	YZ8970728231	ｼｰﾙ,ｵｲﾙ SEAL,OIL	1	154749-				
205A	YZ0911602140	ﾅｯﾄ NUT	1	154749-				
211A	YZ0500408250	ﾎﾞﾙﾄ(ﾜｯｼｬ ﾂｷ) BOLT,W/WASHER	7	154749-				M8X25
212A	YZ0288914450	ﾎﾞﾙﾄ BOLT	7	154749-				M14X45
224A	YZ9944112350	ﾎﾞﾙﾄ,ｽﾀｯﾄﾞ BOLT,STUD	3	154749-				M12X35
275A	YZ5113270090	ﾎﾟｲﾝﾀ,ﾀｲﾐﾝｸﾞ POINTER,TIMING	1	154749-				
297A	YZ9095714160	ﾊﾟｯｷﾝ PACKING	1	154749-				
298A	YZ9992023160	ﾌﾟﾗｸﾞ PLUG	1	154749-				M16X12
361A	YZ0280808450	ﾎﾞﾙﾄ BOLT	2	154749-				M8X45
362A	YZ0286808200	ﾎﾞﾙﾄ(ﾜｯｼｬ ﾂｷ) BOLT,W/WASHER	4	154749-				M8X20
621A	YZ0286808250	ﾎﾞﾙﾄ BOLT	7	154749-				M8X25
622A	YZ0280808500	ﾎﾞﾙﾄ BOLT	5	154749-				M8X50

0-25	INLET MANIFOLD
FIG-NO.	(NO.1)

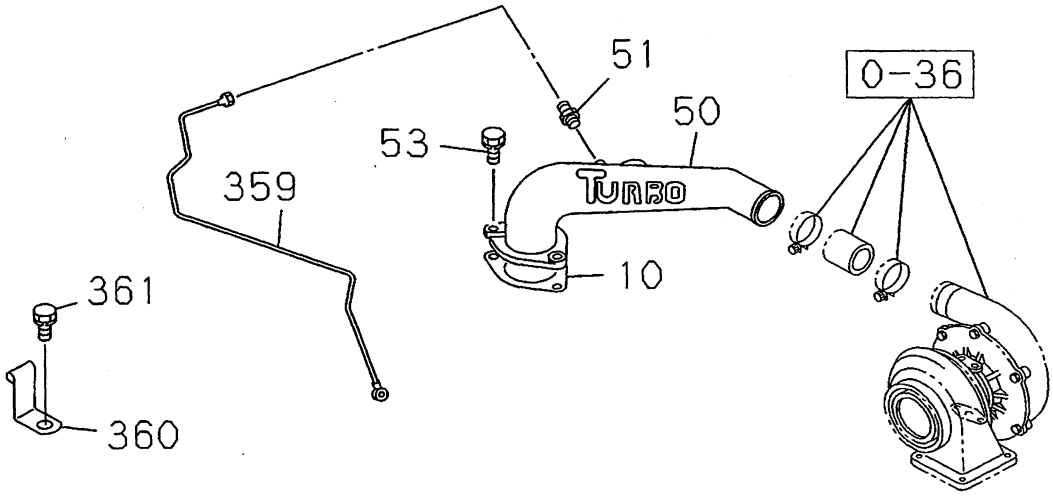

025A0110932

INLET MANIFOLD

(NO.2)

0-25

FIG-NO.

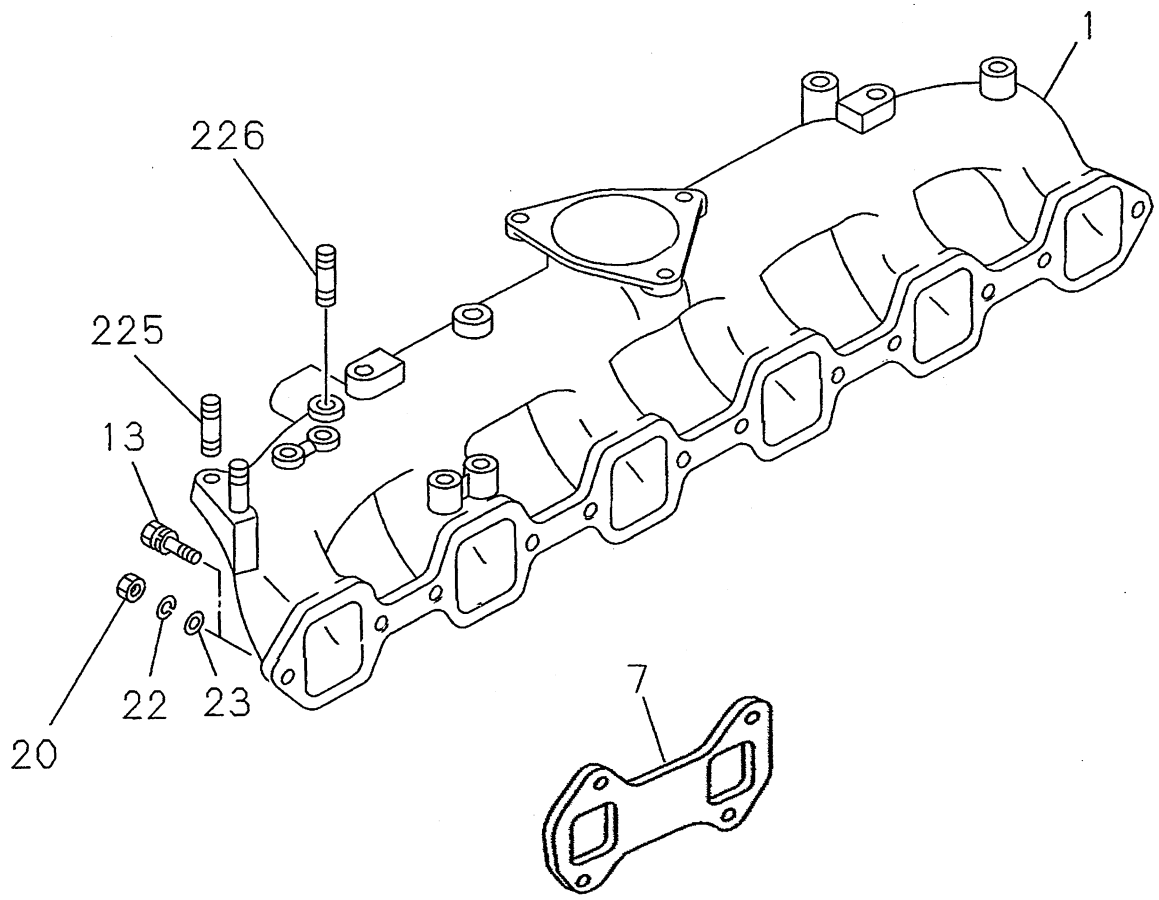

025A0210932

SYM BOL	PART NUMBER	PART NAME	UNIT Q,TY	SERIAL (A) - (B)	REMARKS N P D	(A) (B)	(C) (D)	REMARK
1A	YZ1141122093	ﾏﾆﾎｰﾙﾄﾞ,ｲﾝﾚｯﾄ MANIFOLD,INLET	1	154749-				
7A	YZ8972357881	ｶﾞｽｹｯﾄ GASKET	3	154749-				
10A	YZ1141150590	ﾊﾟｯｷﾝ PACKING	1	154749-				
13A	YZ0501408280	ﾎﾞﾙﾄ(ﾜｯｼｬ ﾂｷ) BOLT,W/WASHER	6	154749-				M8X28
20A	YZ9091104080	ﾅｯﾄ NUT	6	154749-				M8
22A	YZ9091505080	ﾜｯｼｬ,ｽﾌﾟﾘﾝｸﾞ WASHER,SPRING	6	154749-				
23A	YZ9091605080	ﾜｯｼｬ,ﾌﾟﾚｰﾝ WASHER,PLANE	6	154749-				
50A	YZ1141126281	ﾊﾟｲﾌﾟ PIPE	1	154749-				
51A	YZ1096500741	ﾆｯﾌﾟﾙ NIPPLE	1	154749-				
53A	YZ0286808350	ﾎﾞﾙﾄ BOLT	3	154749-				M8X35(YZ0286808
225A	YZ9044110280	ﾎﾞﾙﾄ,ｽﾀｯﾄﾞ BOLT,STUD	2	154749-				M10X28
226A	YZ5093000290	ﾎﾞﾙﾄ,ｽﾀｯﾄﾞ BOLT,STUD	1	154749-				M10X18
359A	YZ1141211240	ﾊﾟｲﾌﾟ ｱｯｾﾝ PIPE ASSY	1	154749-				
360A	YZ1097001210	ｸﾘｯﾌﾟ CLIP	1	154749-				
361A	YZ0280808120	ﾎﾞﾙﾄ BOLT	1	154749-				

MEMO

0-27	EXHAUST MANIFOLD
FIG-NO.	

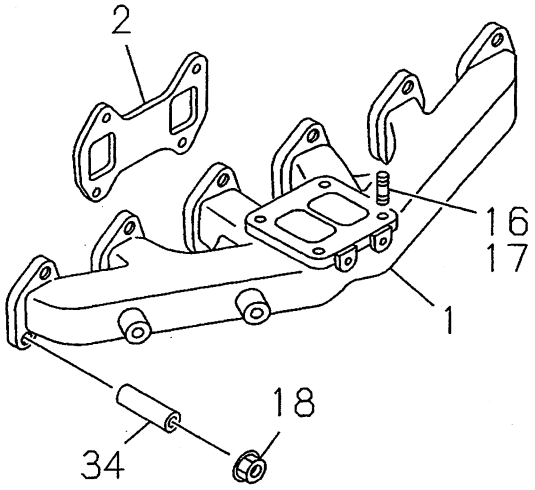

027A0110932

SYM BOL	PART NUMBER	PART NAME	UNIT Q,TY	SERIAL (A) - (B)	REMARKS N P D	(A) (B)	(C) (D)	REMARK
1A	YZ1141418042	ﾏﾆﾎｰﾙﾄﾞ,ｴｷｿﾞｰｽﾄ MANIFOLD,EXHAUST	1	154749-				
2A	YZ8944046100	ｶﾞｽｹｯﾄ GASKET	3	154749-				
16A	YZ9047310250	ﾎﾞﾙﾄ,ｽﾀｯﾄﾞ BOLT,STUD	3	154749-				M10X25
17A	YZ1093001010	ﾎﾞﾙﾄ,ｽﾀｯﾄﾞ BOLT,STUD	1	154749-				M10X85
18A	YZ1094400401	ﾅｯﾄ NUT	12	154749-				M8
34A	YZ1141491701	ﾁｭｰﾌﾞ TUBE	12	154749-				

VENTILATION SYSTEM

(NO.2)

0-28

FIG-NO.

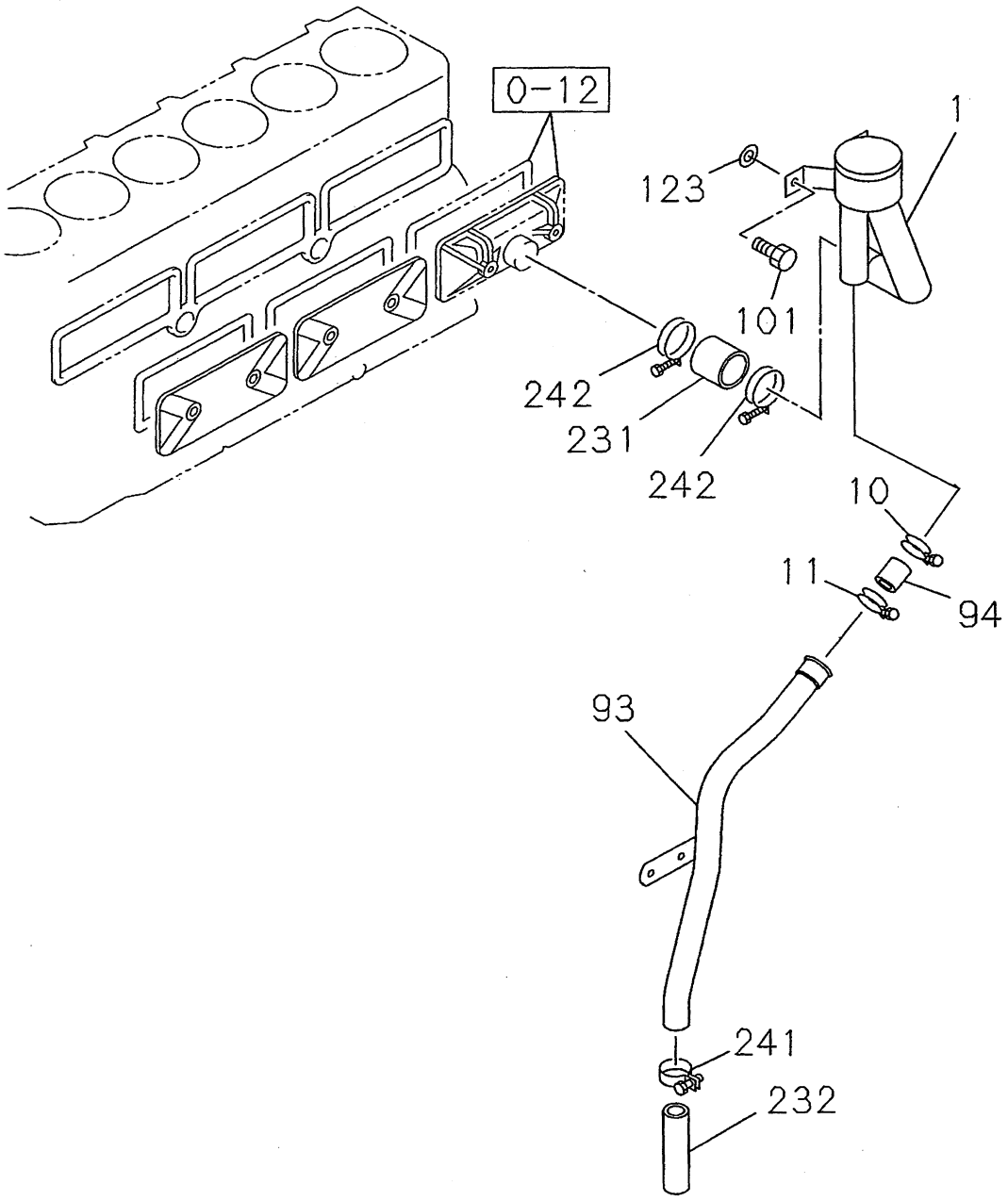

028A0210932

SYM BOL	PART NUMBER	PART NAME	UNIT Q,TY	SERIAL (A) - (B)	REMARKS N P D	(A) (B)	(C) (D)	REMARK
1A	YZ1117402711	ﾌﾞﾘｰｻﾞ BREATHER	1	154749-				
10A	YZ9099152811	ｸﾘｯﾌﾟ CLIP	1	154749-				D=45 YZ50970403
11A	YZ9099155121	ｸﾘｯﾌﾟ CLIP	1	154749-				D=48
93A	YZ1117420602	ﾊﾟｲﾌﾟ,ﾄﾞﾚﾝ PIPE,DRAIN	1	154749-				YZ1117420221
94A	YZ5117490321	ﾎｰｽ HOSE	1	154749-				
101A	YZ0911502080	ﾅｯﾄ NUT	2	154749-				M8
123A	YZ9091646080	ﾜｯｼｬ,ﾌﾟﾚｰﾝ WASHER,PLANE	2	154749-				
231A	YZ8972242050	ﾎｰｽ HOSE	1	154749-				L=53
232A	YZ8941376820	ﾊﾟｲﾌﾟ PIPE	1	154749-				L=430
241A	YZ9099156661	ﾊﾞﾝﾄﾞ,ﾎｰｽ BAND,HOSE	1	154749-				YZ9099152811
242A	YZ5097040313	ﾊﾞﾝﾄﾞ,ﾎｰｽ BAND,HOSE	2	154749-				YZ9099155121

0-30	WATER PUMP AND CORROSION RESISTOR
FIG-NO.	(NO.1)

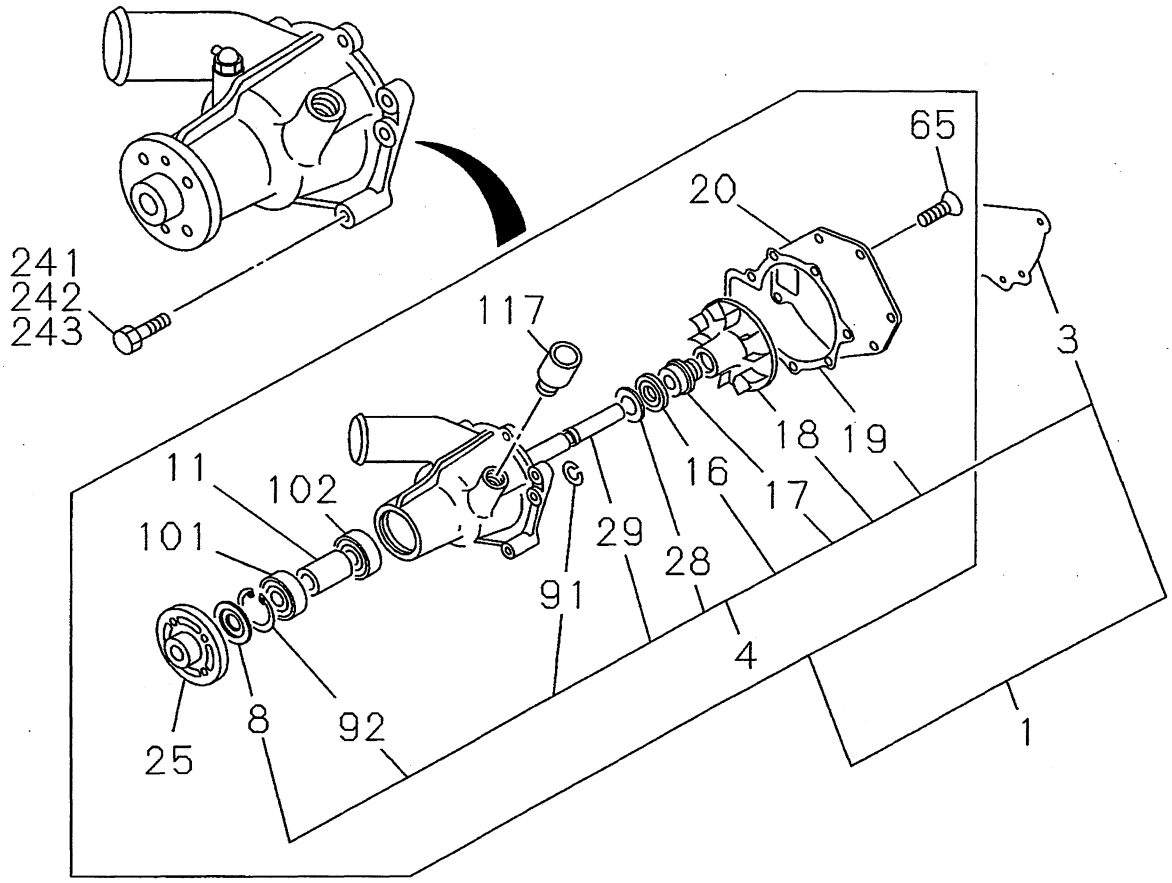

030A0110932

0-30	WATER PUMP AND CORROSION RESISTOR
FIG-NO.	(NO.3)

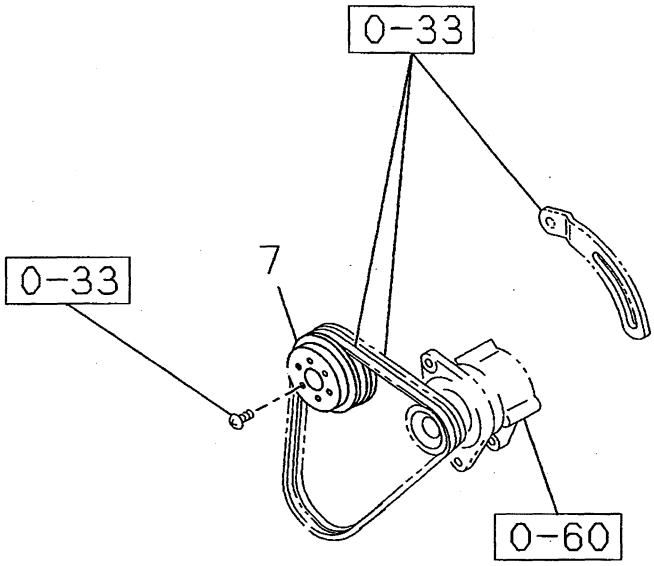

030A0310932

SYM BOL	PART NUMBER	PART NAME	UNIT Q,TY	SERIAL (A) - (B)	REMARKS N P D	(A)	(B)	(C) (D)	REMARK
1A	YZ8972530281	ﾎﾟﾝﾌﾟ,ｳｵｰﾀ PUMP,WATER	1	154749-		Y01			
3A	YZ8943706610	ｶﾞｽｹｯﾄ GASKET	1	154749-		01			
4A	YZ5878143200	ﾘﾍﾟｱ ｷｯﾄ REPAIR KIT	1	154749-		01	Y02		
7A	YZ1136411870	ﾌﾟｰﾘ PULLEY	1	154749-					D=171
8A	YZ5136390010	ｽﾛｳ,ﾀﾞｽﾄ THROWER,DUST	1	154749-			02		
11A	YZ5136340020	ｽﾍﾟｰｻ SPACER	1	154749-		01			
16A	YZ5096250550	ｼｰﾙ SEAL	1	154749-			02		
17A	YZ8972322490	ｼｰﾙ ﾕﾆｯﾄ SEAL UNIT	1	154749-			02		
18A	YZ8972322500	ｲﾝﾍﾟﾗ,ﾎﾟﾝﾌﾟ IMPELLER,PUMP	1	154749-			02		
19A	YZ8972322480	ｶﾞｽｹｯﾄ GASKET	1	154749-			02		
20A	YZ8972322470	ｶﾊﾞｰ COVER	1	154749-		01			
25A	YZ5136420072	ｽﾍﾟｰｻ SPACER	1	154749-		01			
28A	YZ1095030700	ﾜｯｼｬ WASHER	1	154749-			02		
29A	YZ1136310740	ｼｬﾌﾄ SHAFT	1	154749-			02		
65A	YZ9030908200	ｽｸﾘｭｳ SCREW	3	154749-		01			
91A	YZ9099521430	ﾘﾝｸﾞ,ｽﾅｯﾌﾟ RING,SNAP	1	154749-			02		
92A	YZ9091801520	ﾘﾝｸﾞ,ｽﾅｯﾌﾟ RING,SNAP	1	154749-			02		
101A	YZ5098000510	ﾍﾞｱﾘﾝｸﾞ,ﾎﾞｰﾙ BEARING,BALL	1	154749-		01			
102A	YZ5098000500	ﾍﾞｱﾘﾝｸﾞ,ﾎﾞｰﾙ BEARING,BALL	1	154749-		01			
117A	YZ8972498951	ｺﾈｸﾀ CONNECTOR	1	154749-		01			
241A	YZ0280810700	ﾎﾞﾙﾄ BOLT	1	154749-					M10X70
242A	YZ0286810350	ﾎﾞﾙﾄ BOLT	1	154749-					M10X35
243A	YZ0280810500	ﾎﾞﾙﾄ BOLT	2	154749-					M10X50

MEMO

0-31	THERMOSTAT AND HOUSING
FIG-NO.	

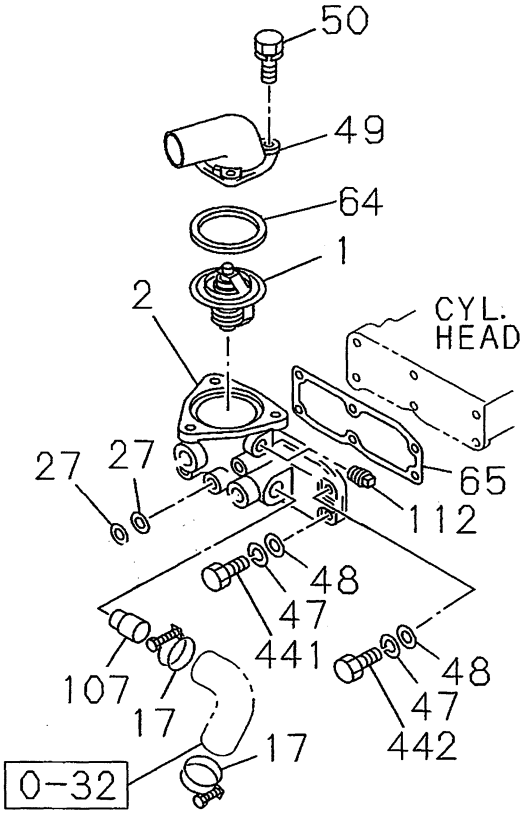

031A0110932

SYM BOL	PART NUMBER	PART NAME	UNIT Q,TY	SERIAL (A) - (B)	REMARKS N P D	(A) (B)	(C) (D)	REMARK
1A	YZ1137700710	サーモスタット THERMOSTAT	1	154749-				
2A	YZ8972248641	ハウジング HOUSING	1	154749-				
17A	YZ5097040460	バンド,ホース BAND,HOSE	2	154749-				
27A	YZ9095714160	パッキン PACKING	2	154749-				
47A	YZ9091505100	ワッシャ,スプリング WASHER,SPRING	3	154749-				
48A	YZ9091605100	ワッシャ,プレーン WASHER,PLANE	3	154749-				
49A	YZ8971632260	パイプ,ウオータ PIPE,WATER	1	154749-				
50A	YZ0501408250	ボルト BOLT	3	154749-				M8X25
64A	YZ1137430160	パッキン PACKING	1	154749-				
65A	YZ8972357891	パッキン PACKING	1	154749-				
107A	YZ8972533621	パイプ,ウオータ PIPE,WATER	1	154749-				
112A	YZ5096050050	プラグ PLUG	1	154749-				PT3/8
441A	YZ0108060950	ボルト(ワッシャ ツキ) BOLT,W/WASHER	2	154749-				M10X95(Z0286810
442A	YZ0108060850	ボルト BOLT	1	154749-				M10X85

0-32	WATER PIPING; ENGINE
FIG-NO.	

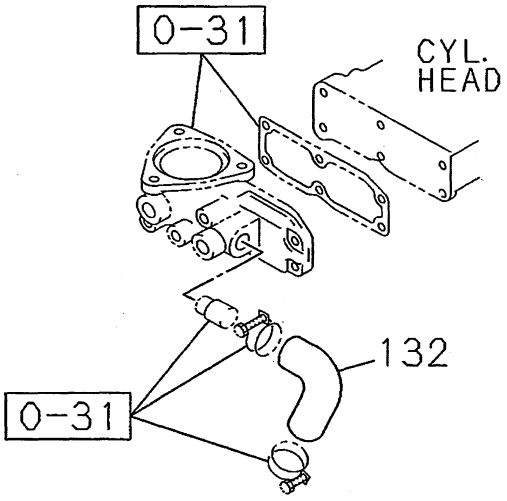

032A0110932

SYM BOL	PART NUMBER	PART NAME	UNIT Q,TY	SERIAL (A) - (B)	REMARKS N P D	(A) (B) (C) (D)	REMARK
132A	YZ8972242040	ホース HOSE	1	154749-			

FAN AND FAN BELT

(NO.2)

0-33

FIG-NO.

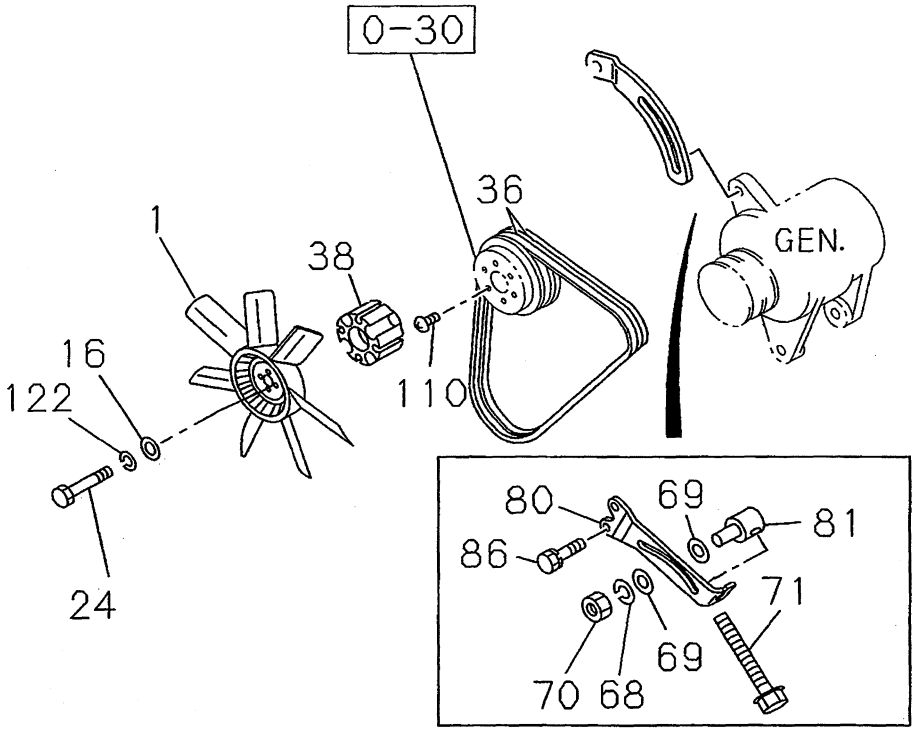

033A0210932

SYM BOL	PART NUMBER	PART NAME	UNIT Q,TY	SERIAL (A) - (B)	REMARKS N P D	(A) (B)	(C) (D)	REMARK
1A	YZ8944838971	ﾌｧﾝ ｱｯｾﾝ FAN ASSY	1	154749-				D=550
16A	YZ9091647080	ﾜｯｼｬ,ﾌﾟﾚｰﾝ WASHER,PLANE	4	154749-				
24A	YZ0280908900	ﾎﾞﾙﾄ BOLT	4	154749-				
36A	YZ1136711430	ﾍﾞﾙﾄ,V BELT,V	1	154749-				L=1226
38A	YZ1136420510	ｽﾍﾟｰｻ SPACER	1	154749-				T=70
68A	YZ9091505120	ﾜｯｼｬ,ｽﾌﾟﾘﾝｸﾞ WASHER,SPRING	1	154749-				
69A	YZ9091607120	ﾜｯｼｬ,ﾌﾟﾚｰﾝ WASHER,PLANE	2	154749-				
70A	YZ9991104120	ﾅｯﾄ NUT	1	154749-				M12
71A	YZ1090091141	ﾎﾞﾙﾄ BOLT	1	154749-				M10X155
80A	YZ1136741192	ﾌﾟﾚｰﾄ PLATE	1	154749-				
81A	YZ1136741610	ﾋﾟｰｽ,ﾃﾞｲｽﾀﾝｽ PIECE,DISTANCE	1	154749-				M12X59
86A	YZ0286810400	ﾎﾞﾙﾄ BOLT	2	154749-				M10X40
110A	YZ9034906100	ｽｸﾘｭｳ SCREW	2	154749-				M6X10
122A	YZ9091505080	ﾜｯｼｬ,ｽﾌﾟﾘﾝｸﾞ WASHER,SPRING	4	154749-				

0-36	TURBOCHARGER SYSTEM
FIG-NO.	

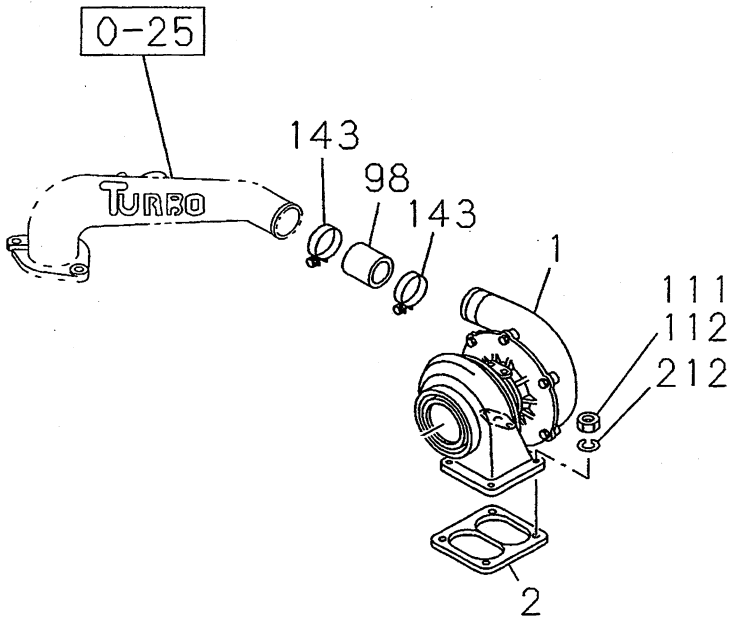

036A0110932

SYM BOL	PART NUMBER	PART NAME	UNIT Q,TY	SERIAL (A) - (B)	REMARKS N P D	(A) (B)	(C) (D)	REMARK
1A	YZ1144003890	ﾀｰﾎﾞﾁｬｰｼﾞｬ ｱｯｾﾝ TURBOCHARGER ASSY	1	154749-				REF.037(1144004
2A	YZ1141451400	ｶﾞｽｹｯﾄ GASKET	1	154749-				
98A	YZ1093607820	ﾎｰｽ HOSE	1	154749-				
111A	YZ9098420070	ﾅｯﾄ NUT	3	154749-				M10 P=1.5
112A	YZ1094000270	ﾅｯﾄ NUT	1	154749-				M10 P=1.25
143A	YZ8943169910	ﾊﾞﾝﾄﾞ,ﾎｰｽ BAND,HOSE	2	154749-				
212A	YZ1095030331	ﾜｯｼｬ,ﾌﾟﾚｰﾝ WASHER,PLANE	4	154749-				

TURBOCHARGER

(NO.4)

0-37

FIG-NO.

ASM
1-14400-389-*

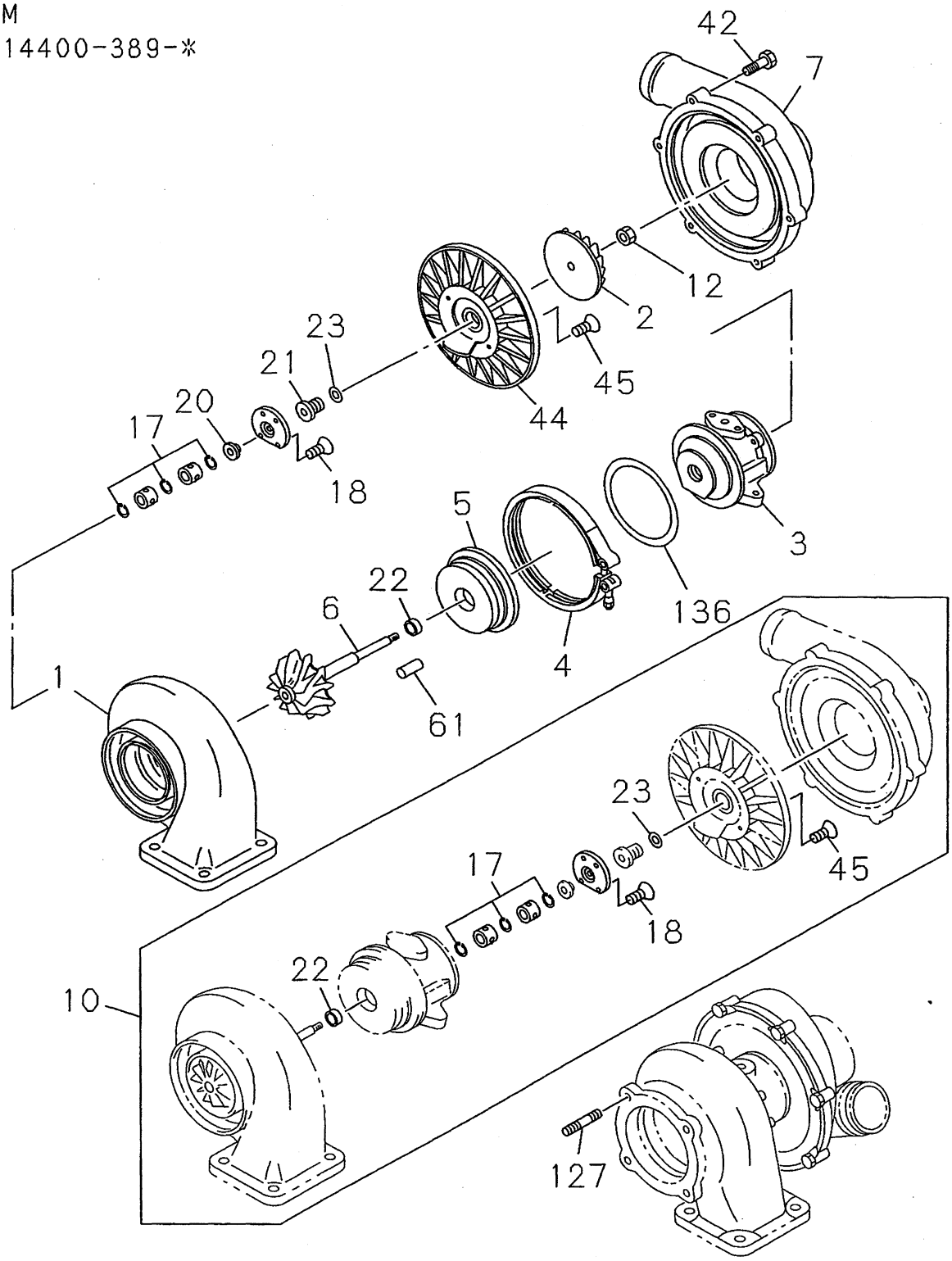

037A0410932

SYM BOL	PART NUMBER	PART NAME	UNIT Q,TY	SERIAL (A) - (B)	REMARKS N P D	(A) (B)	(C) (D)	REMARK
000A	YZ1144003890	ﾀｰﾎﾞﾁｬｰｼﾞｬ ｱｯｾﾝ TURBOCHARGER ASSY	1	154749-				
1A	YZ1144141210	ﾊｳｼﾞﾝｸﾞ HOUSING	1	154749-				YZ1144141270
2A	YZ1144510730	ｲﾝﾍﾟﾗ IMPELLER	1	154749-				YZ1144510570
3A	YZ1144141200	ﾊｳｼﾞﾝｸﾞ HOUSING	1	154749-				YZ1144140940
4A	YZ8972451830	ｸﾗﾝﾌﾟ CLAMP	1	154749-				
5A	YZ1144210300	ﾌﾟﾛﾃｸﾀ PROTECTOR	1	154749-				YZ1144210240
6A	YZ1144500710	ｼｬﾌﾄ,ﾀｰﾋﾞﾝ SHAFT,TURBINE	1	154749-				YZ1144500790
7A	YZ1144141220	ﾊｳｼﾞﾝｸﾞ HOUSING	1	154749-				YZ1144140930
10A	YZ1144530990	ﾘﾍﾟｱ ｷｯﾄ REPAIR KIT	1	154749-		Y01		YZ1144530830
12A	YZ1094000410	ﾅｯﾄ NUT	1	154749-				
17A	YZ1144550420	ﾘﾝｸﾞ,ｽﾅｯﾌﾟ RING,SNAP	3	154749-		01		
18A	YZ1091000410	ｽｸﾘｭｳ SCREW	4	154749-		01		YZ1091000330
20A	YZ1144531000	ﾌﾞｯｼﾝｸﾞ BUSHING	1	154749-				YZ1144530840
21A	YZ1144550480	ｽﾛﾜ,ｵｲﾙ THROWER,OIL	1	154749-				YZ1144550410
22A	YZ1144530860	ﾘﾝｸﾞ,ｼｰﾙ RING,SEAL	1	154749-		01		
23A	YZ1144530850	ﾘﾝｸﾞ,ｼｰﾙ RING,SEAL	1	154749-		01		
42A	YZ1091000400	ﾎﾞﾙﾄ BOLT	6	154749-				YZ1143790880
44A	YZ1144250420	ﾌﾟﾚｰﾄ PLATE	1	154749-				YZ1144250290
45A	YZ1091000390	ｽｸﾘｭｳ SCREW	4	154749-		01		YZ1091000320
61A	YZ8972451820	ﾋﾟﾝ PIN	1	154749-				
127A	YZ9041308250	ﾎﾞﾙﾄ,ｽﾀｯﾄﾞ BOLT,STUD	4	154749-				YZ1143790900
136A	YZ1144120090	ｶﾞｽｹｯﾄ GASKET	1	154749-				

0-40	FUEL INJECTION SYSTEM
FIG-NO.	(NO.1)

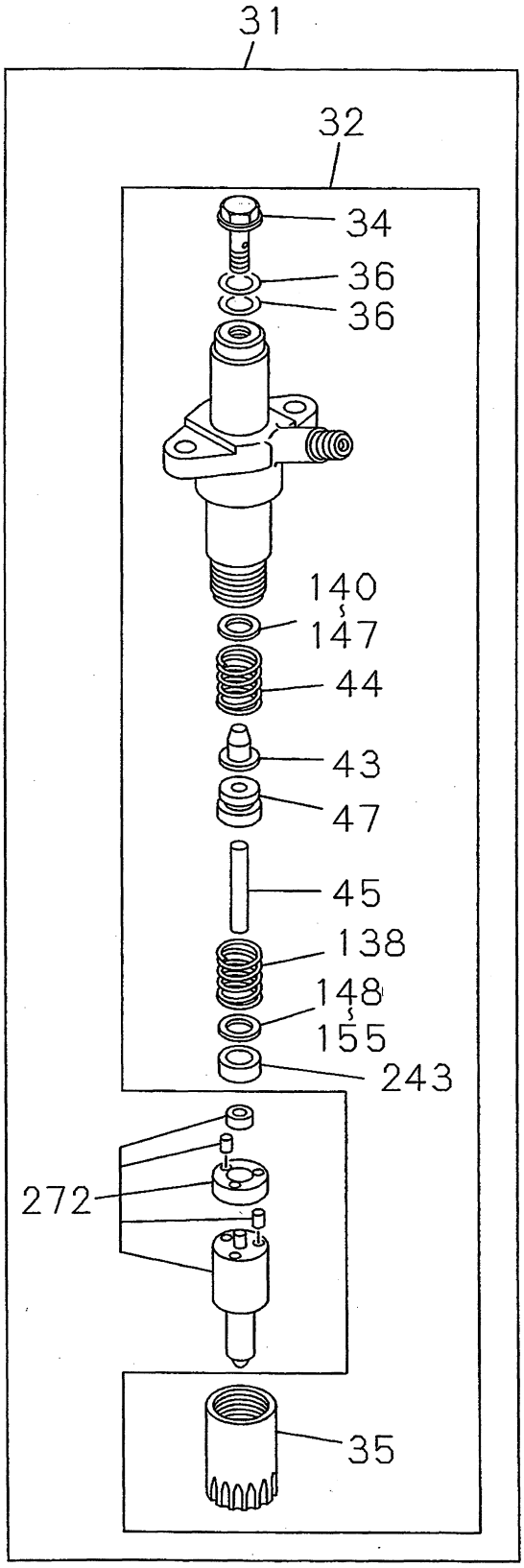

040A0110932

FUEL INJECTION SYSTEM

(NO.2)

0-40
FIG-NO.

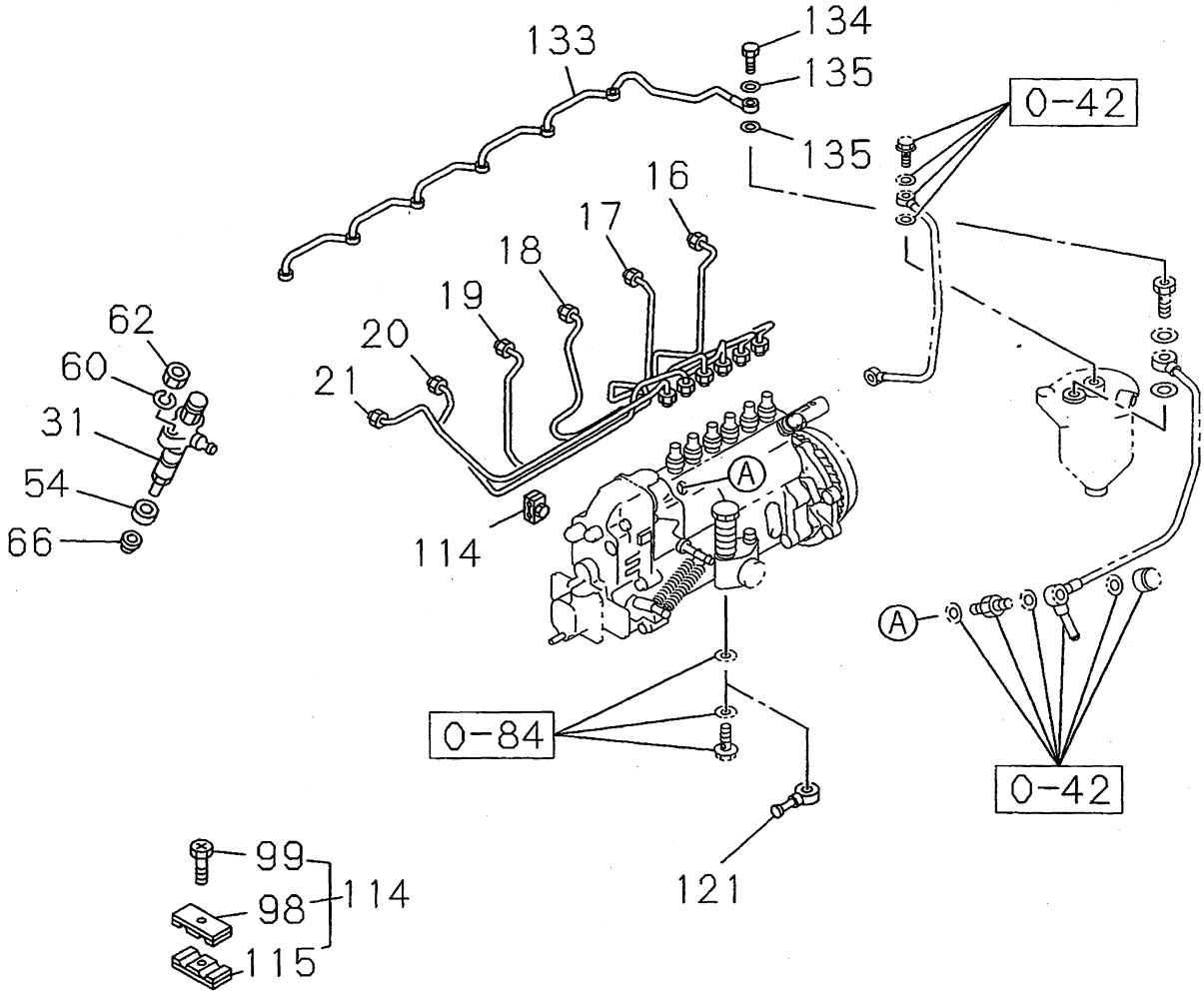

040A0210932

0-40	FUEL INJECTION SYSTEM
FIG-NO.	(NO.3)

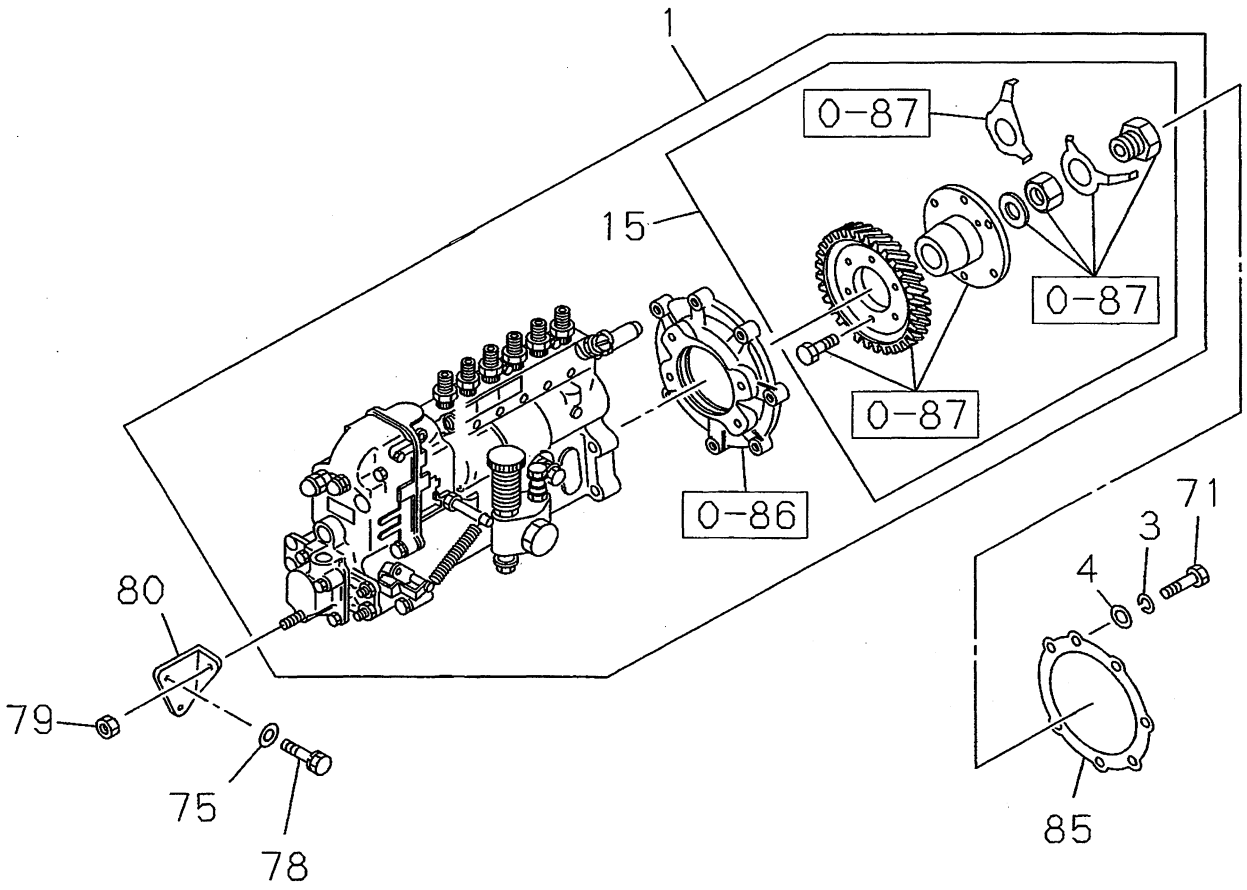

040A0310932

SYM BOL	PART NUMBER	PART NAME	UNIT Q,TY	SERIAL (A) - (B)	REMARKS N P D	(A)	(B)	(C) (D)	REMARK
1A	YZ1156034980	ﾎﾟﾝﾌﾟ ｱｯｾﾝ PUMP ASSY	1	154749-		Y01			REF.080,081,084
3A	YZ9091505080	ﾜｯｼｬ,ｽﾌﾟﾘﾝｸﾞ WASHER,SPRING	7	154749-					
4A	YZ9091605080	ﾜｯｼｬ,ﾌﾟﾚｰﾝ WASHER,PLANE	7	154749-					
15A	YZ8973299400	ｶｯﾌﾟﾘﾝｸﾞ ｱｯｾﾝ COUPLING ASSY	1	154749-		01			REF.087
16A	YZ1154158471	ﾊﾟｲﾌﾟ,ｲﾝｼﾞｪｸｼｮﾝ PIPE,INJECTION	1	154749-					
17A	YZ1154158481	ﾊﾟｲﾌﾟ,ｲﾝｼﾞｪｸｼｮﾝ PIPE,INJECTION	1	154749-					
18A	YZ1154158491	ﾊﾟｲﾌﾟ,ｲﾝｼﾞｪｸｼｮﾝ PIPE,INJECTION	1	154749-					
19A	YZ1154158501	ﾊﾟｲﾌﾟ,ｲﾝｼﾞｪｸｼｮﾝ PIPE,INJECTION	1	154749-					
20A	YZ1154158512	ﾊﾟｲﾌﾟ,ｲﾝｼﾞｪｸｼｮﾝ PIPE,INJECTION	1	154749-					
21A	YZ1154158522	ﾊﾟｲﾌﾟ,ｲﾝｼﾞｪｸｼｮﾝ PIPE,INJECTION	1	154749-					
31A	YZ1153004321	ﾉｽﾞﾙ ｱｯｾﾝ NOZZLE ASSY	6	154749-			Y02		
32A	YZ1153301310	ﾎﾙﾀﾞ ｱｯｾﾝ,ﾉｽﾞﾙ HOLDER ASSY,NOZZLE	1	154749-			02	Y03	
34A	YZ1096750371	ﾎﾞﾙﾄ,ｼﾞｮｲﾝﾄ BOLT,JOINT	1	154749-				03	
35A	YZ1153491110	ﾅｯﾄ NUT	1	154749-				03	
36A	YZ1096300820	ﾊﾟｯｷﾝ PACKING	2	154749-				03	
43A	YZ1153420020	ｼｰﾄ,ｽﾌﾟﾘﾝｸﾞ SEAT,SPRING	1	154749-				03	
44A	YZ1153430050	ｽﾌﾟﾘﾝｸﾞ SPRING	1	154749-				03	
45A	YZ1153491290	ﾛｯﾄﾞ,ﾌﾟｯｼｭ ROD,PUSH	1	154749-				03	
47A	YZ1153491570	ｽﾍﾟｰｻ SPACER	1	154749-				03	
54A	YZ9153390510	ｶﾊﾞｰ COVER	6	154749-					
60A	YZ9091505080	ﾜｯｼｬ,ｽﾌﾟﾘﾝｸﾞ WASHER,SPRING	12	154749-					
62A	YZ9091104080	ﾅｯﾄ NUT	12	154749-					M8
66A	YZ5153150030	ﾊﾟｯｷﾝ PACKING	6	154749-					
71A	YZ0108108600	ﾎﾞﾙﾄ BOLT	7	154749-					M8X60
75A	YZ9091607100	ﾜｯｼｬ,ﾌﾟﾚｰﾝ WASHER,PLANE	2	154749-					
78A	YZ0500410200	ﾎﾞﾙﾄ BOLT	2	154749-					M10X20
79A	YZ9091104100	ﾅｯﾄ NUT	1	154749-					M10
80A	YZ1197511750	ﾌﾞﾗｹｯﾄ BRACKET	1	154749-					
85A	YZ8943706750	ﾊﾟｯｷﾝ PACKING	1	154749-					
98A	YZ9154196130	ｸﾘｯﾌﾟ CLIP	1	154749-				04	
99A	YZ9098025390	ﾎﾞﾙﾄ BOLT	1	154749-				04	M5X20
114A	YZ9154196120	ｸﾘｯﾌﾟ CLIP	6	154749-				Y04	
115A	YZ9154196140	ｸﾘｯﾌﾟ CLIP	1	154749-				04	
121A	YZ5154112231	ﾊﾟｲﾌﾟ,ﾌｭｰｴﾙ PIPE,FUEL	1	154749-					
133A	YZ1154124711	ﾊﾟｲﾌﾟ,ｲﾝｼﾞｪｸｼｮﾝ PIPE,INJECTION	1	154749-					
134A	YZ1096750371	ﾎﾞﾙﾄ,ｼﾞｮｲﾝﾄ BOLT,JOINT	1	154749-					M8X18

SYM BOL	PART NUMBER	PART NAME	UNIT Q,TY	SERIAL (A) - (B)	REMARKS N P D	(A) (B)	(C) (D)	REMARK
135A	YZ1096300820	ﾊﾟｯｷﾝ PACKING	2	154749-				
138A	YZ1153430060	ｽﾌﾟﾘﾝｸﾞ SPRING	1	154749-			03	
140A	YZ1153491120	ｼﾑ SHIM	A/R	154749-			03	T=0.40
141A	YZ1153491130	ｼﾑ SHIM	A/R	154749-			03	T=0.50
142A	YZ1153491140	ｼﾑ SHIM	A/R	154749-			03	T=0.52
143A	YZ1153491150	ｼﾑ SHIM	A/R	154749-			03	T=0.54
144A	YZ1153491160	ｼﾑ SHIM	A/R	154749-			03	T=0.56
145A	YZ1153491170	ｼﾑ SHIM	A/R	154749-			03	T=0.58
146A	YZ1153491180	ｼﾑ SHIM	A/R	154749-			03	T=0.60
147A	YZ1153491190	ｼﾑ SHIM	A/R	154749-			03	T=0.70
148A	YZ1153491200	ｼﾑ SHIM	A/R	154749-			03	T=0.40
149A	YZ1153491210	ｼﾑ SHIM	A/R	154749-			03	T=0.50
150A	YZ1153491220	ｼﾑ SHIM	A/R	154749-			03	T=0.52
151A	YZ1153491230	ｼﾑ SHIM	A/R	154749-			03	T=0.54
152A	YZ1153491240	ｼﾑ SHIM	A/R	154749-			03	T=0.56
153A	YZ1153491250	ｼﾑ SHIM	A/R	154749-			03	T=0.58
154A	YZ1153491260	ｼﾑ SHIM	A/R	154749-			03	T=0.60
155A	YZ1153491270	ｼﾑ SHIM	A/R	154749-			03	T=0.70
243A	YZ1153420030	ｼｰﾄ,ｽﾌﾟﾘﾝｸﾞ SEAT,SPRING	1	154749-			03	
272A	YZ1153190360	ﾉｽﾞﾙ ｱｯｾﾝ NOZZLE ASSY	6	154749-		02		

MEMO

0-41	FUEL FILTER AND BRACKET
FIG-NO.	(NO.1)

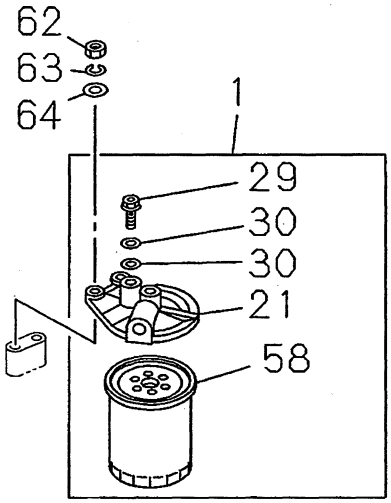

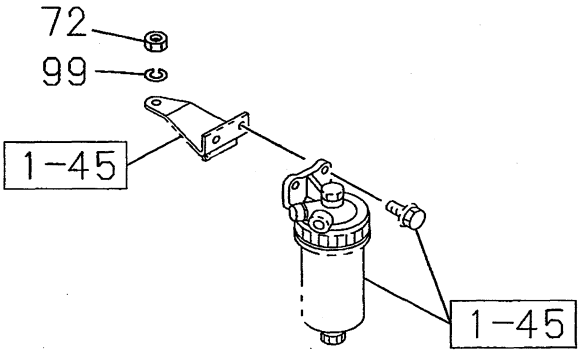

SEDIMENTER

041A0110932

SYM BOL	PART NUMBER	PART NAME	UNIT Q,TY	SERIAL (A) - (B)	REMARKS N P D	(A) (B)	(C) (D)	REMARK
1A	YZ1132007013	ﾌｨﾗｰ ｱｯｾﾝ,ﾌｭｰｴﾙ FILLER ASSY,FUEL	1	154749-		Y01		YZ1132007012
21A	YZ1132120871	ｶﾊﾞｰ ｱｯｾﾝ COVER ASSY	1	154749-		01		
29A	YZ1132600470	ﾊﾞﾙﾌﾞ,ｵｰﾊﾞｰ ﾌﾛｰ VALVE,OVER FLOW	1	154749-		01		
30A	YZ1096300850	ﾊﾟｯｷﾝ PACKING	2	154749-		01		
58A	YZ1132400791	ｶｰﾄﾘｯｼﾞ CARTRIDGE	1	154749-		01		
62A	YZ9091104100	ﾅｯﾄ NUT	2	154749-				M10
63A	YZ9091505100	ﾜｯｼｬ,ｽﾌﾟﾘﾝｸﾞ WASHER,SPRING	2	154749-				
64A	YZ9091605100	ﾜｯｼｬ,ﾌﾟﾚｰﾝ WASHER,PLANE	2	154749-				
72A	YZ9091105100	ﾅｯﾄ NUT	1	154749-				M10
99A	YZ9091505100	ﾜｯｼｬ,ｽﾌﾟﾘﾝｸﾞ WASHER,SPRING	1	154749-				

FUEL PUMP AND PIPE

(NO.2)

0-42

FIG-NO.

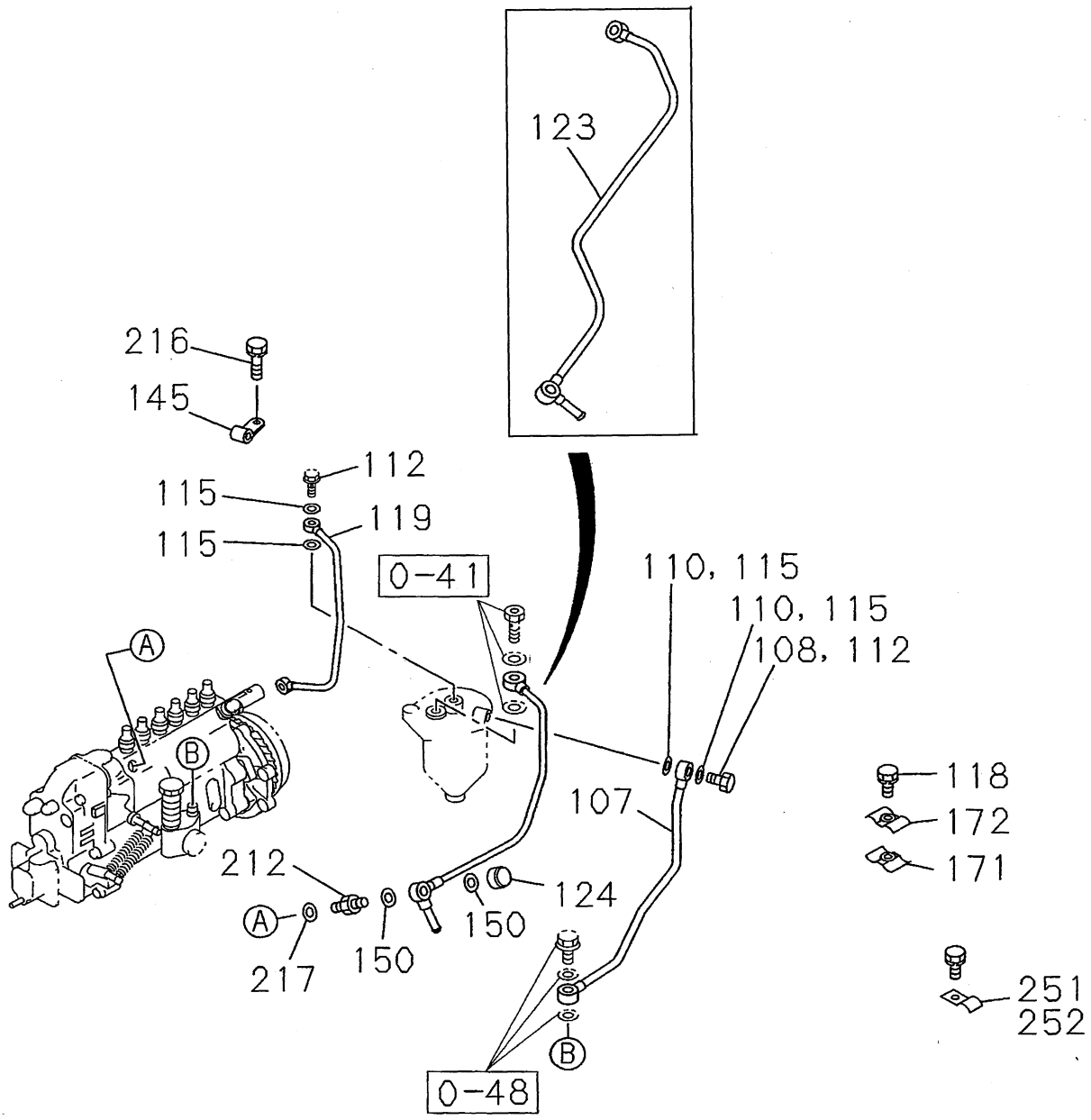

042A0210932

SYM BOL	PART NUMBER	PART NAME	UNIT Q,TY	SERIAL (A) - (B)	REMARKS N P D	(A) (B)	(C) (D)	REMARK
107A	YZ1154158440	ﾊﾟｲﾌﾟ ｱﾂｾﾝ PIPE ASSY	1	154749-				
108A	YZ1096750860	ﾎﾞﾙﾄ,ｼﾞｮｲﾝﾄ BOLT,JOINT	1	154749-				M14X27
110A	YZ1096300850	ﾊﾟｯｷﾝ PACKING	2	154749-				
112A	YZ1096750860	ﾎﾞﾙﾄ,ｼﾞｮｲﾝﾄ BOLT,JOINT	2	154749-				M14X27
115A	YZ1096300850	ﾊﾟｯｷﾝ PACKING	4	154749-				
118A	YZ0500406300	ﾎﾞﾙﾄ(ﾜｯｼｬ ﾂｷ) BOLT,W/WASHER	1	154749-				M6X30
119A	YZ1154158450	ﾊﾟｲﾌﾟ ｱﾂｾﾝ PIPE ASSY	1	154749-				
123A	YZ1154167630	ﾊﾟｲﾌﾟ ｱﾂｾﾝ PIPE ASSY	1	154749-				
124A	YZ1094680021	ﾅｯﾄ,ｷｬｯﾌﾟ NUT,CAP	1	154749-				
145A	YZ9095245550	ｸﾘｯﾌﾟ CLIP	1	154749-				
150A	YZ1096300850	ﾊﾟｯｷﾝ PACKING	2	154749-				
171A	YZ5097091030	ｸﾘｯﾌﾟ CLIP	1	154749-				
172A	YZ5097091040	ｸﾘｯﾌﾟ CLIP	1	154749-				
212A	YZ1132600011	ﾊﾞﾙﾌﾞ,ｵｰﾊﾞｰ ﾌﾛｰ VALVE,OVER FLOW	1	154749-				
216A	YZ0500406300	ﾎﾞﾙﾄ(ﾜｯｼｬ ﾂｷ) BOLT,W/WASHER	1	154749-				M6X30
217A	YZ1096300850	ﾊﾟｯｷﾝ PACKING	2	154749-				
251A	YZ5097091030	ｸﾘｯﾌﾟ CLIP	1	154749-				
252A	YZ5097091040	ｸﾘｯﾌﾟ CLIP	1	154749-				

0-50	OIL COOLER AND OIL FILTER
FIG-NO.	(NO.1)(NO.3)(NO.4)

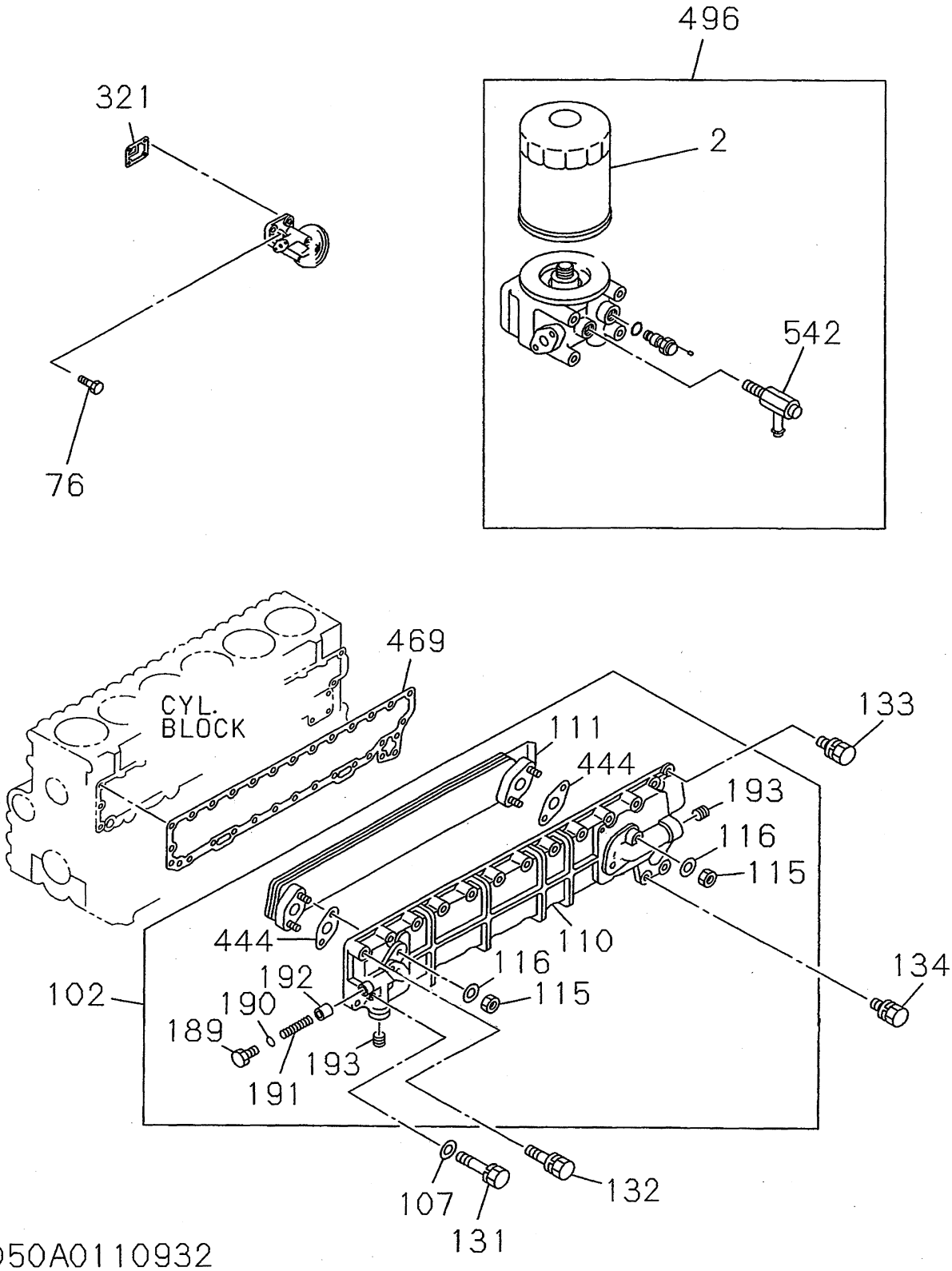

050A0110932
050A0310932
050A0410932

SYM BOL	PART NUMBER	PART NAME	UNIT Q,TY	SERIAL (A) - (B)	REMARKS N P D	(A)	(B)	(C) (D)	REMARK
2A	YZ1132402321	エレメント ELEMENT	1	154749-		01			
76A	YZ0280860140	ボルト BOLT	4	154749-					M10X45
102A	YZ1217002492	クーラ アッセン,オイル COOLER ASSY,OIL	1	154749-			Y02		
107A	YZ9091605080	ワッシャ,プレーン WASHER,PLANE	1	154749-					
110A	YZ1112810281	ボデイ BODY	1	154749-			02		YZ1112810370
111A	YZ1112820180	コア アッセン CORE ASSY	1	154749-			02		
115A	YZ9091114100	ナット NUT	4	154749-			02		M10
116A	YZ9091645100	ワッシャ,プレーン WASHER,PLANE	4	154749-			02		
131A	YZ8942059861	ボルト BOLT	1	154749-					M8X65
132A	YZ0501408450	ボルト(ワッシャ ツキ) BOLT,W/WASHER	12	154749-					M8X45
133A	YZ0501408280	ボルト(ワッシャ ツキ) BOLT,W/WASHER	15	154749-					M8X28
134A	YZ1090300910	ボルト(ワッシャ ツキ) BOLT,W/WASHER	2	154749-					M8X20
189A	YZ9132630100	プラグ PLUG	1	154749-			02		
190A	YZ9095622150	リング,O RING,O	1	154749-			02		
191A	YZ5095800920	スプリング,バルブ SPRING,VALVE	1	154749-			02		
192A	YZ5112880010	バルブ VALVE	1	154749-			02		
193A	YZ5096050170	プラグ PLUG	2	154749-			02		
321A	YZ9095720100	ガスケット GASKET	2	154749-					
444A	YZ1112820290	ガスケット GASKET	2	154749-			02		
469A	YZ1112820281	パッキン PACKING	1	154749-					
496A	YZ1132010630	フイルタ アッセン,オイル FILTER ASSY,OIL	1	154749-		Y01			
542A	YZ8973633370	コック COCK	1	154749-		01			

OIL PUMP AND OIL STRAINER

(NO.2)

0-51

FIG-NO.

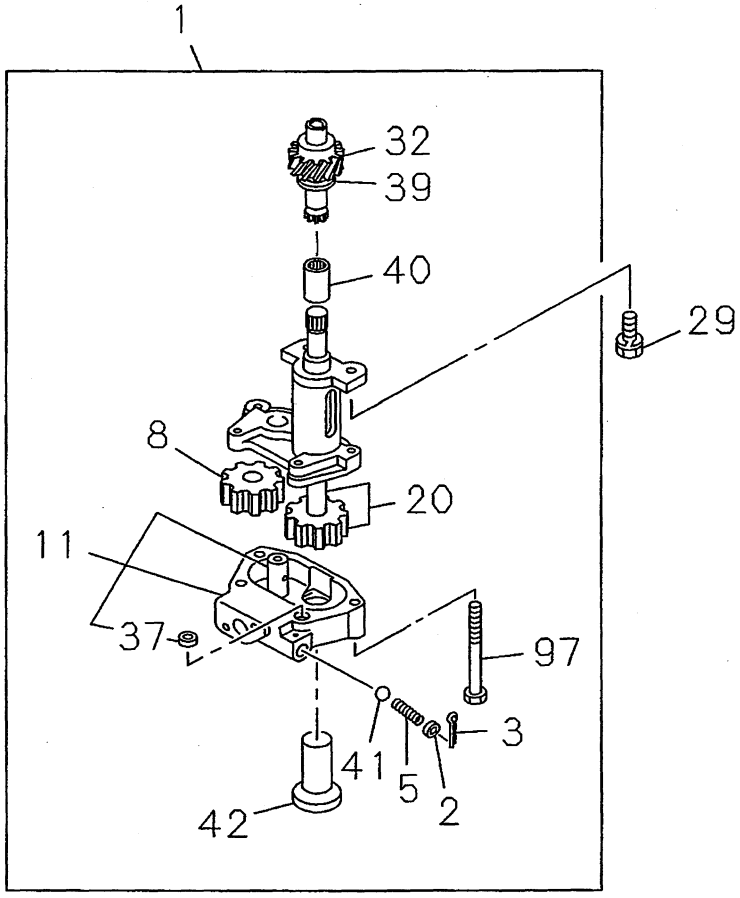

051A0210932

SYM BOL	PART NUMBER	PART NAME	UNIT Q,TY	SERIAL (A) - (B)	REMARKS N P D	(A)	(B)	(C) (D)	REMARK
1A	YZ1131002040	ﾎﾟﾝﾌﾟ,ｵｲﾙ PUMP,OIL	1	154749-		Y01			
2A	YZ5131650040	ｼｰﾄ,ｽﾌﾟﾘﾝｸﾞ SEAT,SPRING	1	154749-		01			
3A	YZ9081040300	ﾋﾟﾝ,ｽﾌﾟﾘｯﾄ PIN,SPLIT	1	154749-		01			
5A	YZ5095800980	ｽﾌﾟﾘﾝｸﾞ SPRING	1	154749-		01			
8A	YZ5131250010	ｷﾞｱ,ﾄﾞﾘﾌﾞﾝ GEAR,DRIVEN	1	154749-		01			
11A	YZ1131130470	ｶﾊﾞｰ ｱｯｾﾝ COVER ASSY	1	154749-		01	Y02		
20A	YZ5131210050	ｷﾞｱ,ﾄﾞﾗｲﾌﾞ GEAR,DRIVE	1	154749-		01			
29A	YZ0286810250	ﾎﾞﾙﾄ(ﾜｯｼｬ ﾂｷ) BOLT,W/WASHER	2	154749-					M10X25
32A	YZ1131280180	ﾋﾟﾆｵﾝ PINION	1	154749-		01			
37A	YZ1131190030	ﾀﾞｳｴﾙ DOWEL	1	154749-			02		
39A	YZ9131190100	ｶﾗｰ COLLAR	1	154749-		01			
40A	YZ1131230160	ｶﾌﾟﾘﾝｸﾞ COUPLING	1	154749-		01			
41A	YZ5098430030	ﾎﾞｰﾙ BALL	1	154749-		01			
42A	YZ1131400790	ｽﾄﾚｰﾅ ｱｯｾﾝ STRAINER ASSY	1	154749-		01			
97A	YZ1090440470	ﾎﾞﾙﾄ BOLT	4	154749-		01			M8X60

0-52	OIL AND VACUUM PIPING; ENGINE
FIG-NO.	(NO.1)

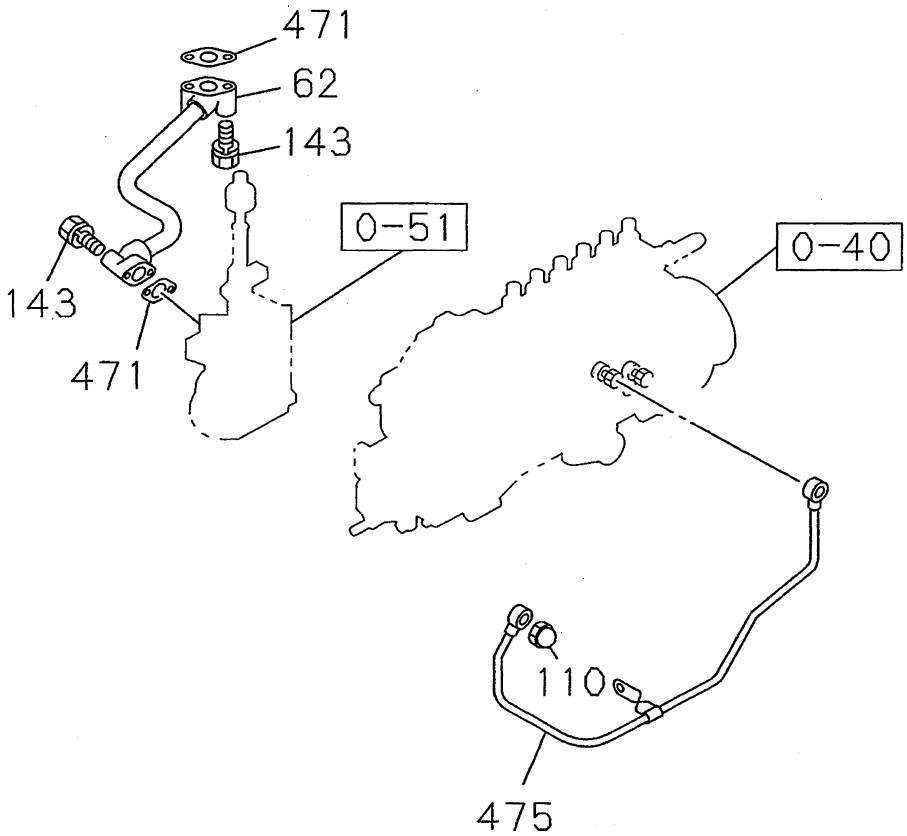

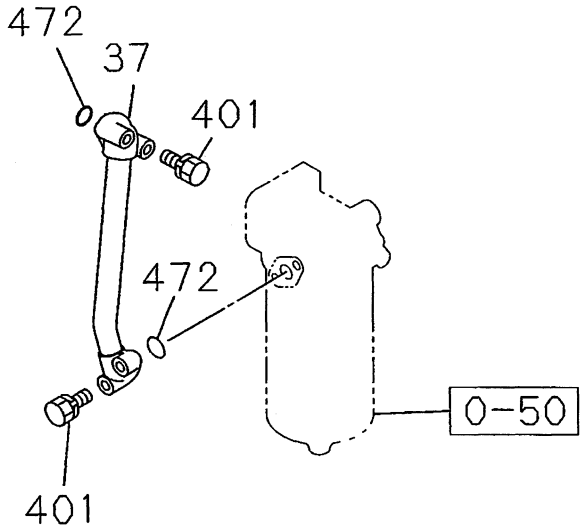

052A0110932

0-52	OIL AND VACUUM PIPING; ENGINE
FIG-NO.	(NO.3) (NO.4)

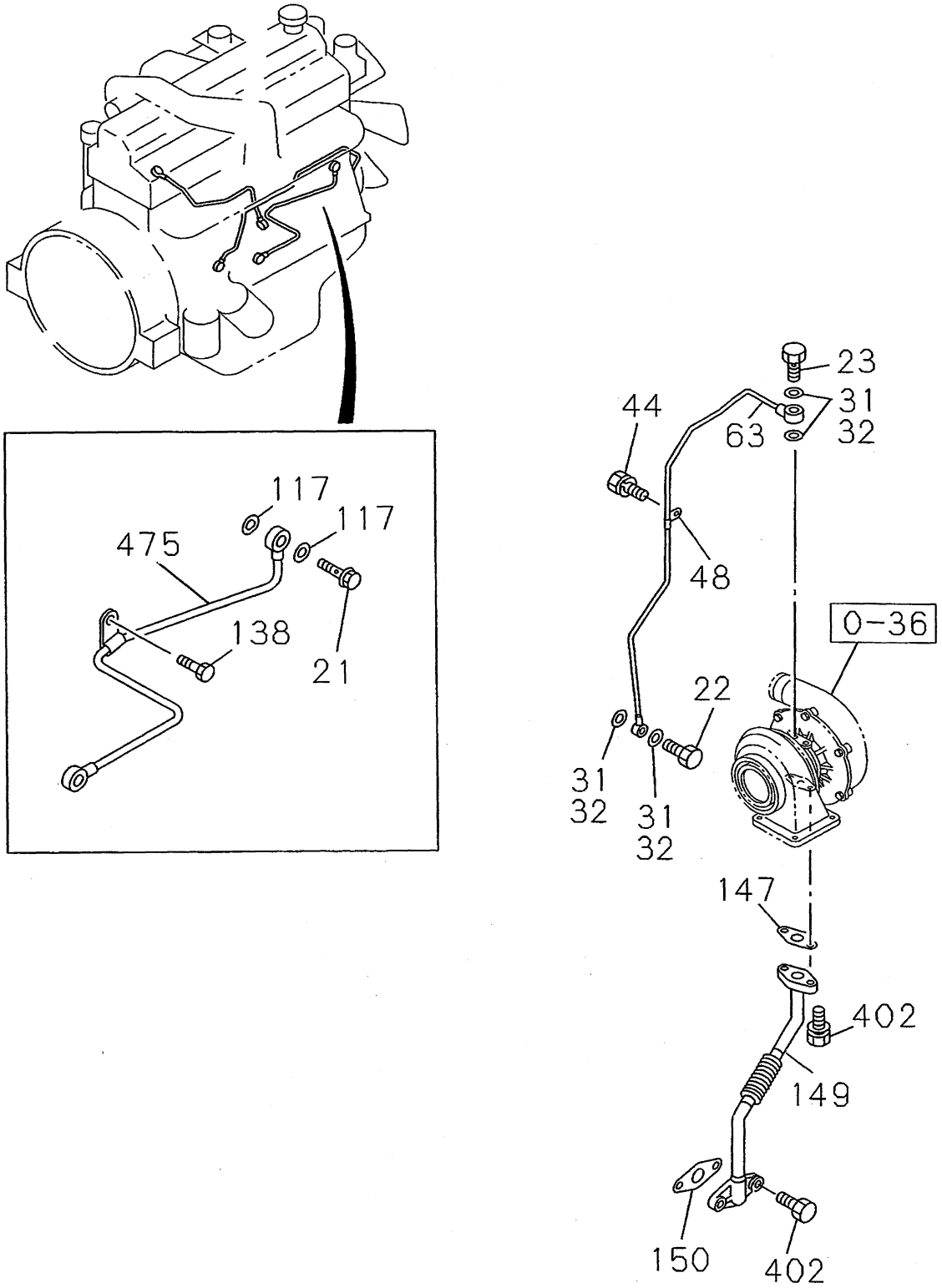

052A0310932
052A0410932

SYM BOL	PART NUMBER	PART NAME	UNIT Q,TY	SERIAL (A) - (B)	REMARKS N P D	(A) (B) (C) (D)	REMARK
21A	YZ8972225710	ﾎﾞﾙﾄ BOLT	1	154749-			
22A	YZ1096750810	ﾎﾞﾙﾄ,ｼﾞｮｲﾝﾄ BOLT,JOINT	1	154749-			M12X24
23A	YZ8941077132	ﾎﾞﾙﾄ,ｱｲ BOLT,EYE	1	154749-			M10X26
31A	YZ1096300840	ﾊﾟｯｷﾝ PACKING	2	154749-			D=12.2
32A	YZ9095714120	ﾊﾟｯｷﾝ PACKING	2	154749-			D=12.2
37A	YZ1133140150	ﾊﾟｲﾌﾟ ｱｯｾﾝ,ｵｲﾙ PIPE ASSY,OIL	1	154749-			
44A	YZ0280808120	ﾎﾞﾙﾄ BOLT	1	154749-			M8X12
48A	YZ5097040541	ｸﾘｯﾌﾟ CLIP	1	154749-			
62A	YZ1133115322	ﾊﾟｲﾌﾟ ｱｯｾﾝ,ｵｲﾙ PIPE ASSY,OIL	1	154749-			
63A	YZ1133138980	ﾊﾟｲﾌﾟ ｱｯｾﾝ,ｵｲﾙ PIPE ASSY,OIL	1	154749-			
110A	YZ9098440220	ﾅｯﾄ,ｷｬｯﾌﾟ NUT,CAP	1	154749-			M10
117A	YZ1096300830	ﾊﾟｯｷﾝ PACKING	2	154749-			
138A	YZ0280808160	ﾎﾞﾙﾄ BOLT	1	154749-			M8X16
143A	YZ0500408400	ﾎﾞﾙﾄ(ﾜｯｼｬ ﾂｷ) BOLT,W/WASHER	4	154749-			M8X40
147A	YZ8943906410	ｶﾞｽｹｯﾄ GASKET	1	154749-			
149A	YZ1133138742	ﾊﾟｲﾌﾟ ｱｯｾﾝ,ｵｲﾙ PIPE ASSY,OIL	1	154749-			YZ1133138741
150A	YZ1096370600	ﾊﾟｯｷﾝ PACKING	1	154749-			
401A	YZ0286808400	ﾎﾞﾙﾄ BOLT	4	154749-			M8X40
402A	YZ0280808500	ﾎﾞﾙﾄ BOLT	4	154749-			M8X50
471A	YZ9099211880	ﾊﾟｯｷﾝ PACKING	2	154749-			
472A	YZ1096234620	ﾘﾝｸﾞ,O RING,O	2	154749-			
475A	YZ1133136030	ﾊﾟｲﾌﾟ,ｵｲﾙ PIPE,OIL	1	154749-			

MEMO

0-60	ENGINE ELECTRICAL CONTROL PARTS
FIG-NO.	(NO.1) (NO.2) (NO.3)

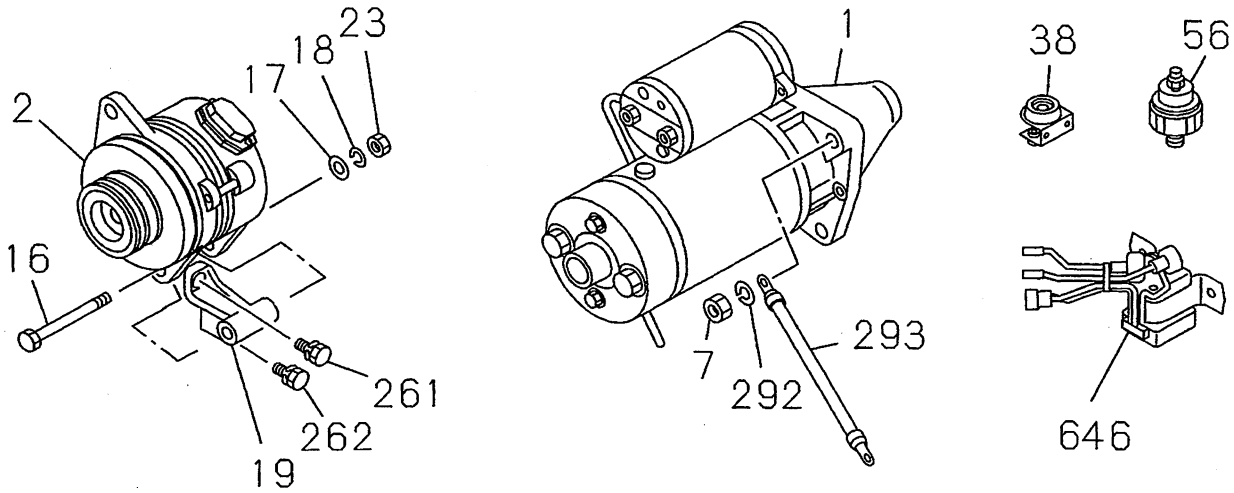

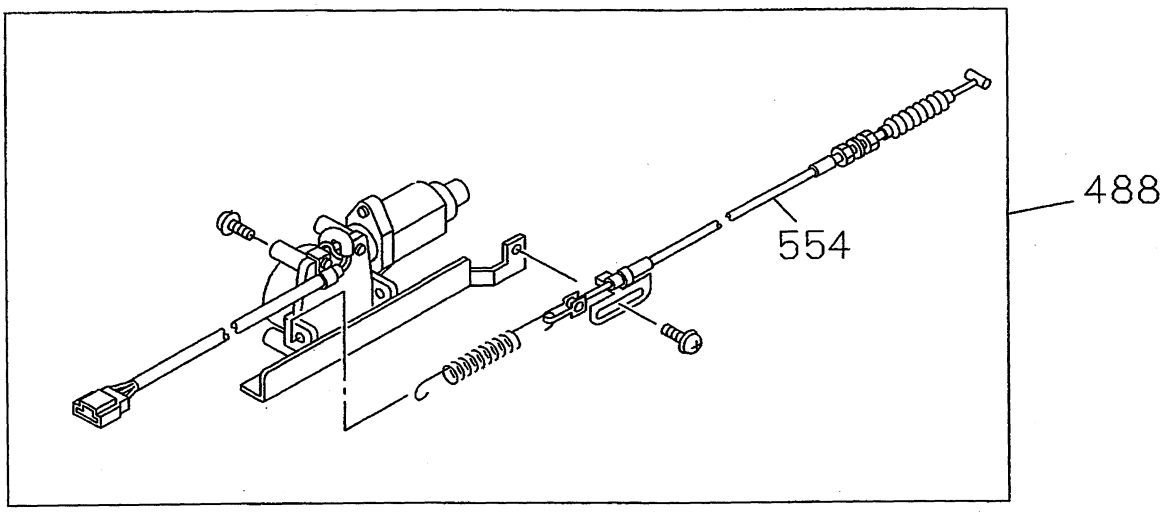

060A0110932
060A0210932
060A0310932

SYM BOL	PART NUMBER	PART NAME	UNIT Q,TY	SERIAL (A) - (B)	REMARKS N P D	(A)	(B)	(C) (D)	REMARK
		スタータ モータ アッセン							
1A	YZ1811001892	STARTER MOTOR ASSY	1	154749-					REF.065
		ジ゛エネレータ アッセン							
2A	YZ1812005303	GENERATOR ASSY	1	154749-					REF.066
		ナット							
7A	YZ9991104120	NUT	3	154749-					M12
		ホ゛ルト(ワッシャ ツキ)							
16A	YZ1090001331	BOLT,W/WASHER	1	154749-					M14X135
		ワッシャ,フ゜レーン							
17A	YZ9091605140	WASHER,PLANE	1	154749-					
		ワッシャ,スフ゜リング゛							
18A	YZ9091505140	WASHER,SPRING	1	154749-					
		フ゛ラケット							
19A	YZ5197110312	BRACKET	1	154749-					
		ナット							
23A	YZ9991104140	NUT	1	154749-					M14
		レジ゛スタンス,コントロール							
38A	YZ9825300430	RESISTANCE,CONTROL	1	154749-					
		スイッチ,フ゜レッシャ							
56A	YZ1824100082	SWITCH,PRESSURE	1	154749-					
		ホ゛ルト(ワッシャ ツキ)							
261A	YZ0280810250	BOLT,W/WASHER	1	154749-					M10X25
		ホ゛ルト							
262A	YZ0286810350	BOLT	2	154749-					M10X35
		ワッシャ,スフ゜リング゛							
292A	YZ9091505120	WASHER,SPRING	3	154749-					
		ケーフ゛ル							
293A	YZ9829322110	CABLE	1	154749-					
		モータ アッセン,エレクトリック							
488A	YZ1819002260	MOTOR ASSY,ELECTRIC	1	154749-		YO1			
		ケーフ゛ル アッセン							
554A	YZ1819091010	CABLE ASSY	1	154749-		O1			YZ1819091060
		リレー							
646A	YZ1825530391	RELAY	1	154749-					

STARTER

(NO.2)

0-65

FIG-NO.

(NOTE) : KIT (SYMBOL 1) CONSISTS OF THE PARTS WITH a.

ASM 1-81100-189-*

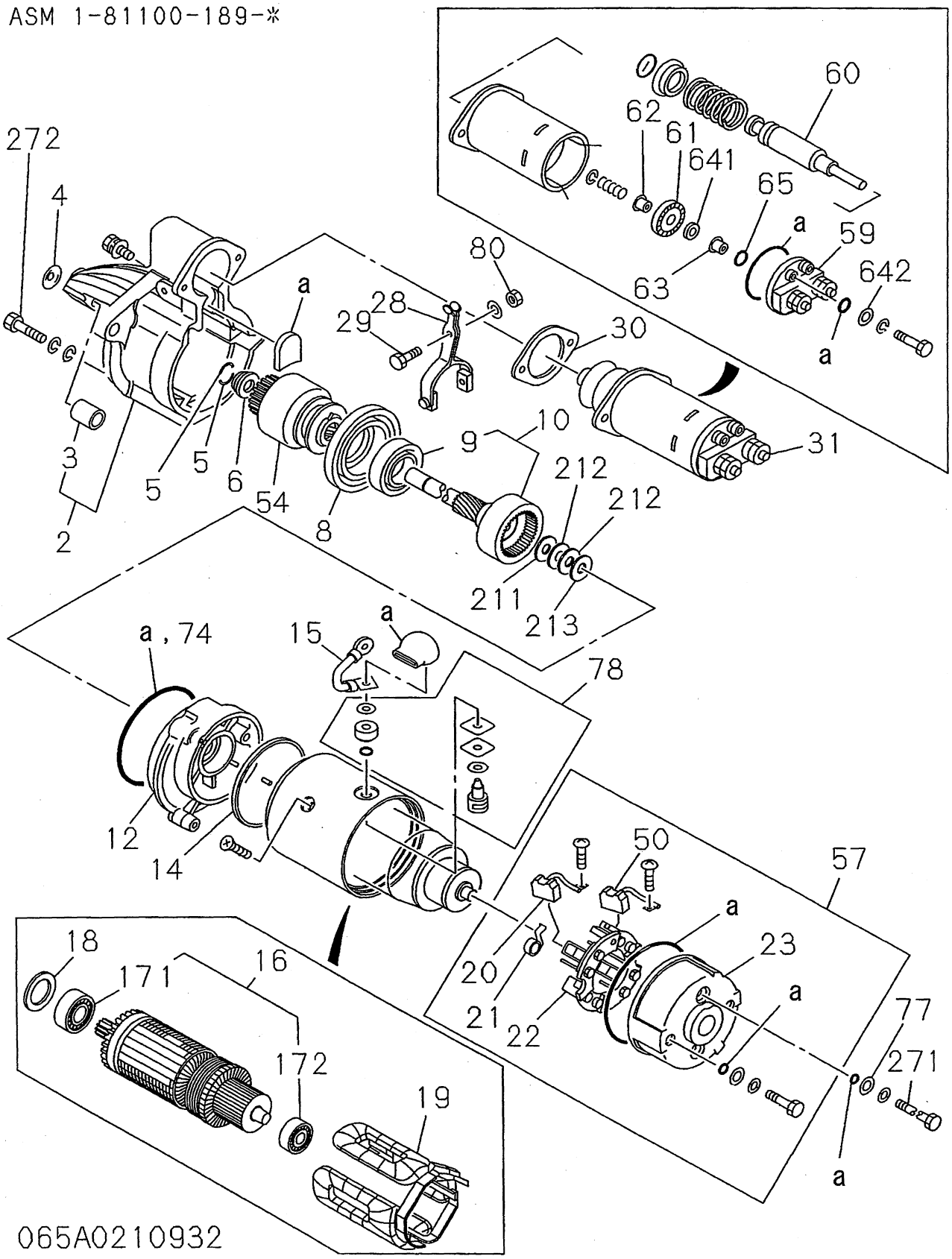

SYM BOL	PART NUMBER	PART NAME	UNIT Q,TY	SERIAL (A) - (B)	REMARKS N P D	(A)	(B)	(C)	(D)	REMARK
		スタータ モータ アッセン								
000A	YZ1811001892	STARTER MOTOR ASSY	1	154749-						
		シール キット								
1A	YZ1811294380	SEAL KIT	1	154749-						
		カバー,フロント								
2A	YZ1811230250	COVER,FRONT	1	154749-		Y01				YZ1811140190
		メタル,シエル								
3A	YZ1811293970	METAL,SHELL	1	154749-		01				YZ5811190120
		カバー								
4A	YZ5811291420	COVER	1	154749-						
		リング,スナップ								
5A	YZ5811291440	RING,SNAP	2	154749-						
		ストッパ								
6A	YZ5811291450	STOPPER	1	154749-						YZ1811291760
		ブラケット								
8A	YZ1811130810	BRACKET	1	154749-						
		ベアリング,ボール								
9A	YZ1811293860	BEARING,BALL	1	154749-				03		
		シャフト アッセン								
10A	YZ1811230240	SHAFT ASSY	1	154749-				Y03		YZ1811291810
		ブラケット								
12A	YZ1811130820	BRACKET	1	154749-						YZ8972266510
		ビーム								
14A	YZ1811293890	BEAM	1	154749-						
		ケーブル								
15A	YZ1811160440	CABLE	1	154749-						
		アーマチュア								
16A	YZ1811210370	ARMATURE	1	154749-					Y04	YZ1811210250
		ワッシャ								
18A	YZ5811291560	WASHER	2	154749-						YZ1811291750
		コイル アッセン,フィールド								
19A	YZ1811293960	COIL ASSY,FIELD	1	154749-						YZ8972505740
		ブラシ								
20A	YZ1811160420	BRUSH	2	154749-			02			YZ1811160720
		スプリング								
21A	YZ1811170140	SPRING	4	154749-			02			YZ1811291780
		ホルダ,ブラシ								
22A	YZ1811180360	HOLDER,BRUSH	1	154749-			02			YZ1811180650
		カバー,リア								
23A	YZ1811150700	COVER,REAR	1	154749-			02			YZ8972266500
		レバー,シフト								
28A	YZ1811270310	LEVER,SHIFT	1	154749-						YZ5811270130
		ボルト								
29A	YZ1811291850	BOLT	1	154749-						
		プレート								
30A	YZ5811291470	PLATE	1	154749-						
		スイッチ アッセン,マグネット								
31A	YZ5811510360	SWITCH ASSY,MAGNET	1	154749-		Y05				YZ8972266730
		ブラシ								
50A	YZ1811160430	BRUSH	2	154749-			02			YZ1811160230
		クラッチ アッセン								
54A	YZ5811220160	CLUTCH ASSY	1	154749-						YZ1811230096
		カバー アッセン								
57A	YZ1811150690	COVER ASSY	1	154749-			Y02			
		ターミナル アッセン								
59A	YZ5811291500	TERMINAL ASSY	1	154749-		05				
		プランジャ								
60A	YZ5811291460	PLUNGER	1	154749-		05				
		コンタクタ								
61A	YZ5811291480	CONTACTOR	1	154749-		05				
		ブッシング								
62A	YZ9821161400	BUSHING	1	154749-		05				
		ホルダ								
63A	YZ5811180190	HOLDER	1	154749-		05				
		リング								
65A	YZ5811291490	RING	2	154749-		05				
		ガスケット								
74A	YZ1811292990	GASKET	1	154749-						
		ワッシャ								
77A	YZ1812291140	WASHER	2	154749-						
		ターミナル アッセン								
78A	YZ1811293840	TERMINAL ASSY	1	154749-						

SYM BOL	PART NUMBER	PART NAME	UNIT Q,TY	SERIAL (A) - (B)	REMARKS N P D	(A) (B)	(C) (D)	REMARK
80A	YZ1811291840	ﾅｯﾄ NUT	1	154749-				
171A	YZ5811291550	ﾍﾞｱﾘﾝｸﾞ,ﾎﾞｰﾙ BEARING,BALL	1	154749-			04	YZ1811298640
172A	YZ1811291960	ﾍﾞｱﾘﾝｸﾞ,ﾎﾞｰﾙ BEARING,BALL	1	154749-			04	YZ1811298650
211A	YZ5811291600	ﾜｯｼｬ WASHER	1	154749-				
212A	YZ5811291590	ﾜｯｼｬ WASHER	2	154749-				
213A	YZ5811291580	ﾜｯｼｬ,ｲﾝｼｭﾚｰﾄ WASHER,INSULATE	1	154749-				
271A	YZ1811293870	ﾎﾞﾙﾄ BOLT	2	154749-				YZ8970304040
272A	YZ5811292140	ﾎﾞﾙﾄ BOLT	2	154749-				
641A	YZ9821161420	ﾜｯｼｬ WASHER	1	154749-		05		
642A	YZ5811291510	ﾜｯｼｬ WASHER	2	154749-		05		

MEMO

GENERATOR

(NO.12)

0-66

FIG-NO.

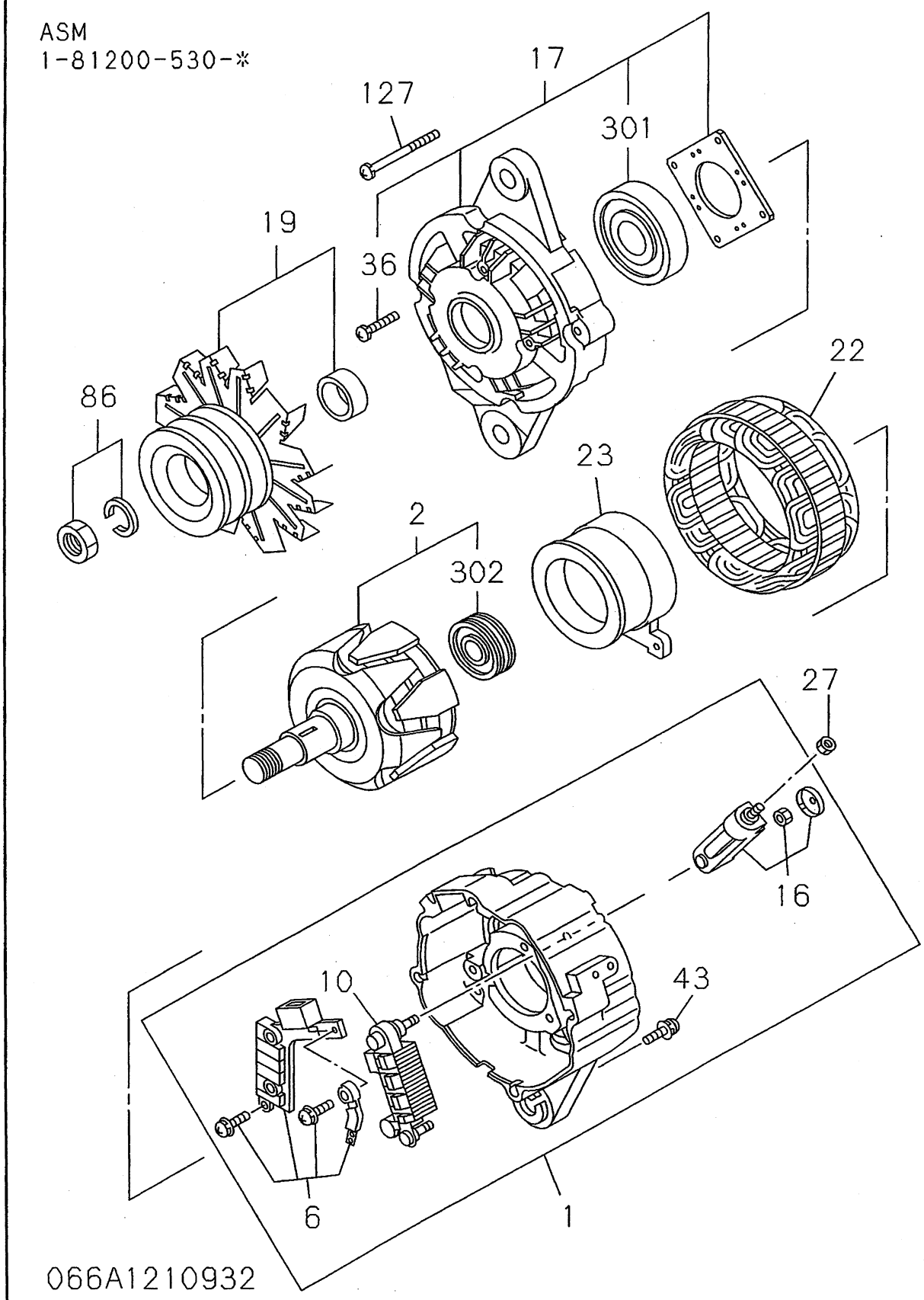

SYM BOL	PART NUMBER	PART NAME	UNIT Q,TY	SERIAL (A) - (B)	REMARKS N P D	(A)	(B)	(C) (D)	REMARK
000A	YZ1812005303	ｼﾞｴﾈﾚｰﾀ ｱﾂｾﾝ GENERATOR ASSY	1	154749-					
1A	YZ1812143670	ｶﾊﾞｰ ｱﾂｾﾝ COVER ASSY	1	154749-		Y01			
2A	YZ1812211020	ﾛｰﾀ ｱﾂｾﾝ ROTOR ASSY	1	154749-			Y02		
6A	YZ1812600170	ﾚｷﾞｭﾚｰﾀ REGULATOR	1	154749-		01			
10A	YZ1812298330	ﾚｸﾁﾌｱｲｱ ｱﾂｾﾝ RECTIFIER ASSY	1	154749-		01			
16A	YZ1812297710	ﾀｰﾐﾅﾙ ｱﾂｾﾝ TERMINAL ASSY	1	154749-		01			
17A	YZ1812131010	ｶﾊﾞｰ ｱﾂｾﾝ COVER ASSY	1	154749-				Y03	
19A	YZ1812221301	ﾌﾟｰﾘ ｱﾂｾﾝ PULLEY ASSY	1	154749-					
22A	YZ1812111290	ｽﾃｰﾀ STATOR	1	154749-					
23A	YZ1812120160	ｺｲﾙ COIL	1	154749-					
27A	YZ1812297720	ﾅｯﾄ NUT	1	154749-					
36A	YZ1812297680	ｽｸﾘｭｳ SCREW	4	154749-				03	
43A	YZ1812298320	ｽｸﾘｭｳ SCREW	1	154749-		01			
86A	YZ8971781340	ﾅｯﾄ NUT	1	154749-					
127A	YZ1812297670	ﾎﾞﾙﾄ ｾｯﾄ BOLT SET	1	154749-					
301A	YZ1812297690	ﾍﾞｱﾘﾝｸﾞ BEARING	1	154749-				03	
302A	YZ1812297700	ﾍﾞｱﾘﾝｸﾞ BEARING	1	154749-			02		

INJECTION PUMP

(NO.2)

0-80

FIG-NO.

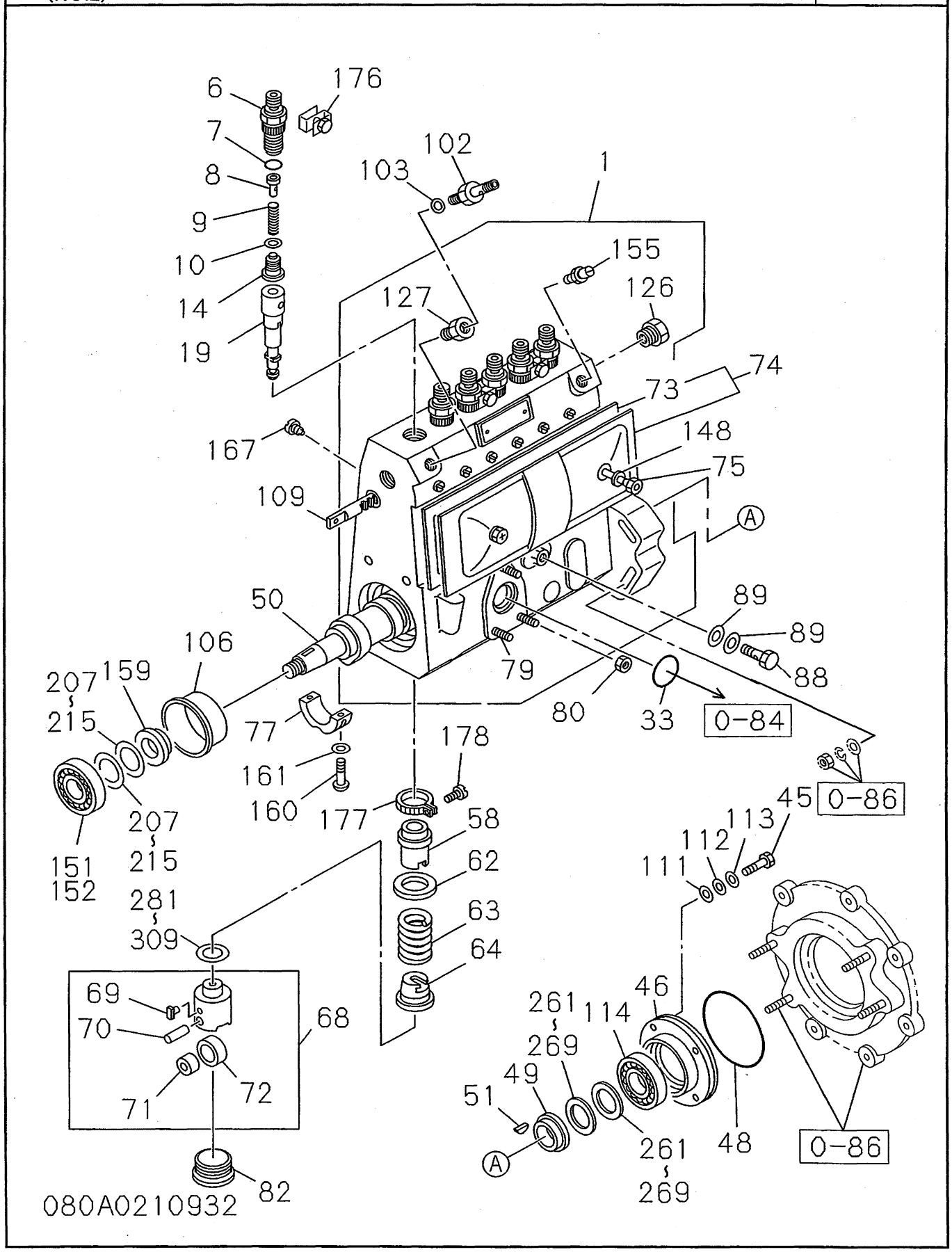

SYM BOL	PART NUMBER	PART NAME	UNIT Q,TY	SERIAL (A) - (B)	REMARKS N P D	(A)	(B)	(C)	(D)	REMARK
1A	YZ1156112220	ﾊｳｼﾞﾝｸﾞ ｱｯｾﾝ HOUSING ASSY	1	154749-		Y01				
6A	YZ1156440090	ﾎﾙﾀﾞ HOLDER	6	154749-		01				
7A	YZ9812350460	ﾘﾝｸﾞ,O RING,O	6	154749-		01				
8A	YZ1156490050	ｽﾄｯﾊﾟ STOPPER	6	154749-		01				
9A	YZ1156430140	ｽﾌﾟﾘﾝｸﾞ SPRING	6	154749-		01				
10A	YZ1156191030	ｶﾞｽｹｯﾄ GASKET	6	154749-		01				
14A	YZ1156410310	ﾊﾞﾙﾌﾞ,ﾃﾞﾘﾊﾞﾘ VALVE,DELIVERY	6	154749-		01				
19A	YZ1156320580	ﾌﾟﾗﾝｼﾞｬ ｱｯｾﾝ PLUNGER ASSY	6	154749-		01				
33A	YZ1096230130	ﾘﾝｸﾞ,O RING,O	1	154749-						
45A	YZ8970850000	ﾎﾞﾙﾄ BOLT	4	154749-						YZ9019006140
46A	YZ8970849990	ｶﾊﾞｰ COVER	1	154749-						
48A	YZ1096230530	ﾘﾝｸﾞ,O RING,O	1	154749-						YZ1156290760
49A	YZ1156290040	ﾘﾝｸﾞ RING	1	154749-						YZ8970849900
50A	YZ1156211270	ｶﾑｼｬﾌﾄ CAMSHAFT	1	154749-						
51A	YZ1156290090	ｷｰ KEY	1	154749-						
58A	YZ9812315230	ｽﾘｰﾌﾞ SLEEVE	6	154749-						
62A	YZ1156390220	ｼｰﾄ,ｽﾌﾟﾘﾝｸﾞ SEAT,SPRING	6	154749-						
63A	YZ1156340070	ｽﾌﾟﾘﾝｸﾞ SPRING	6	154749-						
64A	YZ1156390230	ｼｰﾄ,ｽﾌﾟﾘﾝｸﾞ SEAT,SPRING	6	154749-						
68A	YZ1156220060	ﾀﾍﾟｯﾄ ｱｯｾﾝ TAPPET ASSY	6	154749-			Y02			
69A	YZ1156290180	ｶﾞｲﾄﾞ GUIDE	1	154749-			02			
70A	YZ9812151850	ﾋﾟﾝ PIN	1	154749-			02			
71A	YZ1156191620	ﾌﾞｯｼﾝｸﾞ BUSHING	1	154749-			02			
72A	YZ1156290100	ﾛｰﾗ ROLLER	1	154749-			02			
73A	YZ1157299600	ｶﾞｽｹｯﾄ GASKET	1	154749-				03		
74A	YZ1156120500	ｶﾊﾞｰ,ｻｲﾄﾞ COVER,SIDE	1	154749-				Y03		
75A	YZ1156190030	ﾎﾞﾙﾄ BOLT	2	154749-						
77A	YZ1156192640	ﾍﾞｱﾘﾝｸﾞ BEARING	1	154749-						
79A	YZ9812151150	ﾎﾞﾙﾄ,ｽﾀｯﾄﾞ BOLT,STUD	3	154749-		01				
80A	YZ8941711100	ﾅｯﾄ NUT	3	154749-						
82A	YZ1156191600	ﾌﾟﾗｸﾞ PLUG	6	154749-						
88A	YZ1156190920	ﾎﾞﾙﾄ,ｼﾞｮｲﾝﾄ BOLT,JOINT	1	154749-						
89A	YZ1157190930	ﾊﾟｯｷﾝ PACKING	2	154749-						
102A	YZ1156194880	ﾊﾞﾙﾌﾞ VALVE	1	154749-						
103A	YZ1096300850	ﾊﾟｯｷﾝ PACKING	2	154749-						
106A	YZ1156191590	ﾘﾝｸﾞ RING	1	154749-						

SYM BOL	PART NUMBER	PART NAME	UNIT Q,TY	SERIAL (A) - (B)	REMARKS N P D	(A) (B)	(C) (D)	REMARK
109A	YZ5156370030	ﾗｯｸ,ｺﾝﾄﾛｰﾙ RACK,CONTROL	1	154749-				
111A	YZ1156290240	ｶﾞｽｹｯﾄ GASKET	4	154749-				
112A	YZ8970850010	ｼﾑ SHIM	4	154749-				
113A	YZ8941289280	ﾜｯｼｬ WASHER	4	154749-				
114A	YZ8970849890	ﾍﾞｱﾘﾝｸﾞ BEARING	1	154749-				
126A	YZ9812350170	ｱﾀﾞﾌﾟﾀ ADAPTER	1	154749-		01		
127A	YZ1156191900	ｱﾀﾞﾌﾟﾀ ADAPTER	1	154749-		01		
148A	YZ9812151440	ｶﾞｽｹｯﾄ GASKET	2	154749-				
151A	YZ1156290020	ﾍﾞｱﾘﾝｸﾞ,ﾎﾞｰﾙ BEARING,BALL	1	154749-				NSK
152A	YZ1156290030	ﾍﾞｱﾘﾝｸﾞ,ﾎﾞｰﾙ BEARING,BALL	1	154749-				TOYO
155A	YZ1156191910	ﾎﾞﾙﾄ BOLT	1	154749-		01		
159A	YZ1156290040	ﾘﾝｸﾞ RING	1	154749-				
160A	YZ1156290170	ｽｸﾘｭｳ SCREW	2	154749-				
161A	YZ9812250430	ﾜｯｼｬ WASHER	2	154749-				
167A	YZ1156390030	ｽｸﾘｭｳ SCREW	1	154749-				
176A	YZ5156250010	ﾌﾟﾚｰﾄ PLATE	3	154749-		01		
177A	YZ9812250570	ﾋﾟﾆｵﾝ PINION	6	154749-				
178A	YZ9812350030	ｽｸﾘｭｳ SCREW	6	154749-				
207A	YZ9812250490	ｼﾑ SHIM	A/R	154749-				T=0.1
208A	YZ9812250500	ｼﾑ SHIM	A/R	154749-				T=0.12
209A	YZ9812250510	ｼﾑ SHIM	A/R	154749-				T=0.14
210A	YZ9812250520	ｼﾑ SHIM	A/R	154749-				T=0.16
211A	YZ9812250530	ｼﾑ SHIM	A/R	154749-				T=0.18
212A	YZ1156290070	ｼﾑ SHIM	A/R	154749-				T=0.3(YZ9812250
213A	YZ9812250540	ｼﾑ SHIM	A/R	154749-				T=0.5(YZ1156290
214A	YZ1156291050	ｼﾑ SHIM	A/R	154749-				T=0.7(YZ1156290
215A	YZ1156290080	ｼﾑ SHIM	A/R	154749-				T=1.0(YZ1156291
261A	YZ8970849910	ｼﾑ SHIM	A/R	154749-				T=0.1
262A	YZ8970849920	ｼﾑ SHIM	A/R	154749-				T=0.12
263A	YZ8970849930	ｼﾑ SHIM	A/R	154749-				T=0.14
264A	YZ8970849940	ｼﾑ SHIM	A/R	154749-				T=0.16
265A	YZ8970849950	ｼﾑ SHIM	A/R	154749-				T=0.18
266A	YZ8970849960	ｼﾑ SHIM	A/R	154749-				T=0.3
267A	YZ8970849970	ｼﾑ SHIM	A/R	154749-				T=0.5
268A	YZ8970849980	ｼﾑ SHIM	A/R	154749-				T=1.0
269A	YZ8971216200	ｼﾑ SHIM	A/R	154749-				

SYM BOL	PART NUMBER	PART NAME	UNIT Q,TY	SERIAL (A) - (B)	REMARKS N P D	(A) (B) (C) (D)	REMARK
281A	YZ5156190250	ｼﾑ SHIM	A/R	154749-			T=0.2(YZ5156190
282A	YZ5156190260	ｼﾑ SHIM	A/R	154749-			T=0.25(Z5156190
283A	YZ5156190340	ｼﾑ SHIM	A/R	154749-			T=0.3(YZ5156190
284A	YZ5156190270	ｼﾑ SHIM	A/R	154749-			T=0.35(Z5156190
285A	YZ5156190350	ｼﾑ SHIM	A/R	154749-			T=0.4(YZ5156190
286A	YZ5156190370	ｼﾑ SHIM	A/R	154749-			T=0.45(Z5156190
287A	YZ5156190360	ｼﾑ SHIM	A/R	154749-			T=0.5(YZ5156190
288A	YZ5156190110	ｼﾑ SHIM	A/R	154749-			T=0.55(Z5156190
289A	YZ5156190010	ｼﾑ SHIM	A/R	154749-			T=0.6(YZ5156190
290A	YZ5156190120	ｼﾑ SHIM	A/R	154749-			T=0.65(Z5156190
291A	YZ5156190020	ｼﾑ SHIM	A/R	154749-			T=0.7(YZ5156190
292A	YZ5156190130	ｼﾑ SHIM	A/R	154749-			T=0.75
293A	YZ5156190030	ｼﾑ SHIM	A/R	154749-			T=0.8(YZ5156190
294A	YZ5156190150	ｼﾑ SHIM	A/R	154749-			T=0.85(Z9812350
295A	YZ5156190040	ｼﾑ SHIM	A/R	154749-			T=0.9(YZ9812350
296A	YZ9812350420	ｼﾑ SHIM	A/R	154749-			T=0.95(Z9812350
297A	YZ5156190050	ｼﾑ SHIM	A/R	154749-			T=0.1(YZ9812350
298A	YZ9812350430	ｼﾑ SHIM	A/R	154749-			T=.105(Z5156191
299A	YZ5156190070	ｼﾑ SHIM	A/R	154749-			T=0.11(Z5156191
300A	YZ9812350440	ｼﾑ SHIM	A/R	154749-			T=.115(Z5156190
301A	YZ5156190080	ｼﾑ SHIM	A/R	154749-			T=0.12(Z5156190
302A	YZ9812350450	ｼﾑ SHIM	A/R	154749-			T=.125(Z5156190
303A	YZ5156190090	ｼﾑ SHIM	A/R	154749-			T=0.13(Z5156190
304A	YZ5156191080	ｼﾑ SHIM	A/R	154749-			T=.135
305A	YZ5156190100	ｼﾑ SHIM	A/R	154749-			T=0.14(Z5156191
306A	YZ5156191090	ｼﾑ SHIM	A/R	154749-			T=.145(Z5156191
307A	YZ5156191060	ｼﾑ SHIM	A/R	154749-			T=0.15(Z5156190
308A	YZ5156191100	ｼﾑ SHIM	A/R	154749-			T=.155(Z5156190
309A	YZ5156191070	ｼﾑ SHIM	A/R	154749-			T=0.16(Z5156190

GOVERNOR; INJECTION PUMP

(NO.2)

0-81

FIG-NO.

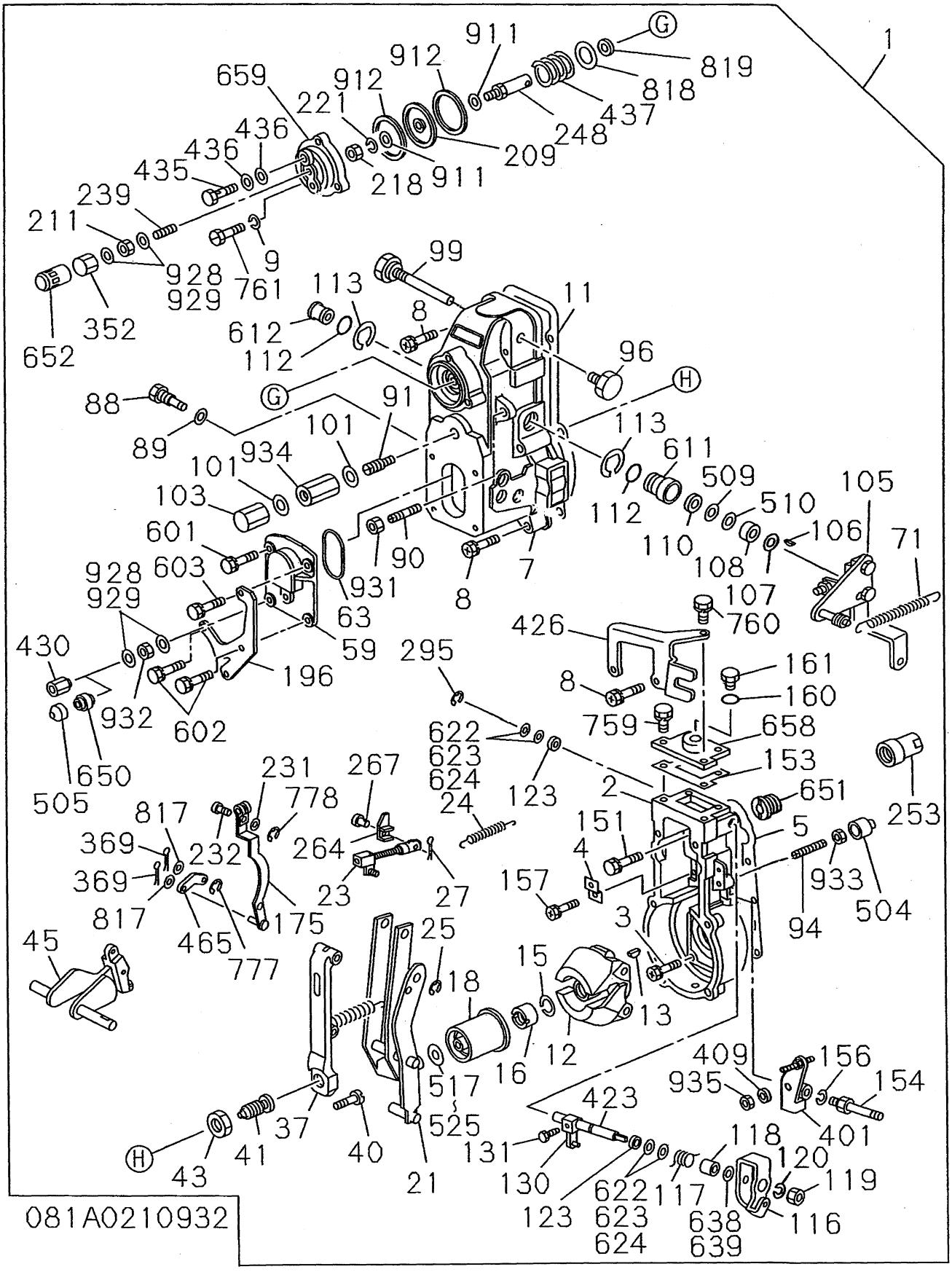

SYM BOL	PART NUMBER	PART NAME	UNIT Q,TY	SERIAL (A) - (B)	REMARKS N P D	(A) (B) (C) (D)	REMARK
1A	YZ1157301270	ｶﾞﾊﾞﾅ ｱｯｾﾝ GOVERNOR ASSY	1	154749-			
2A	YZ8972519130	ﾊｳｼﾞﾝｸﾞ HOUSING	1	154749-			
3A	YZ5157290270	ﾎﾞﾙﾄ BOLT	5	154749-			
4A	YZ9813253910	ﾌﾟﾚｰﾄ PLATE	1	154749-			
5A	YZ1157791060	ｶﾞｽｹｯﾄ GASKET	1	154749-			
7A	YZ1157213490	ｶﾊﾞｰ COVER	1	154749-			
8A	YZ5157290540	ﾎﾞﾙﾄ BOLT	6	154749-			
9A	YZ9091505060	ﾜｯｼｬ,ｽﾌﾟﾘﾝｸﾞ WASHER,SPRING	3	154749-			
11A	YZ1157790940	ｶﾞｽｹｯﾄ GASKET	1	154749-			
12A	YZ1157220170	ﾌﾗｲｳｴｲﾄ FLYWEIGHT	1	154749-			
13A	YZ5196190490	ｷｰ KEY	1	154749-			
15A	YZ5157290340	ﾜｯｼｬ,ｽﾌﾟﾘﾝｸﾞ WASHER,SPRING	1	154749-			
16A	YZ9813250860	ﾅｯﾄ NUT	1	154749-			
18A	YZ5157293720	ｽﾘｰﾌﾞ SLEEVE	1	154749-			
21A	YZ1157254130	ﾚﾊﾞｰ ｱｯｾﾝ LEVER ASSY	1	154749-			
23A	YZ8973320350	ﾘﾝｸ LINK	1	154749-			
24A	YZ5157231600	ｽﾌﾟﾘﾝｸﾞ SPRING	1	154749-			
25A	YZ9091854040	ﾘﾝｸﾞ,ｽﾅｯﾌﾟ RING,SNAP	1	154749-			
27A	YZ1157293160	ﾋﾟﾝ,ｽﾅｯﾌﾟ PIN,SNAP	1	154749-			
37A	YZ8970638230	ﾚﾊﾞｰ ｱｯｾﾝ LEVER ASSY	1	154749-			
40A	YZ1157794820	ｽｸﾘｭｳ SCREW	1	154749-			
41A	YZ1157231860	ｶﾌﾟｾﾙ,ｽﾌﾟﾘﾝｸﾞ CAPSULE,SPRING	1	154749-			
43A	YZ9008130230	ﾅｯﾄ NUT	1	154749-			
45A	YZ8970242380	ﾚﾊﾞｰ LEVER	1	154749-			
59A	YZ1157212370	ｶﾊﾞｰ COVER	1	154749-			
63A	YZ1157795740	ｶﾞｽｹｯﾄ GASKET	1	154749-			
71A	YZ5157230880	ｽﾌﾟﾘﾝｸﾞ SPRING	1	154749-			
88A	YZ9813252150	ﾎﾞﾙﾄ BOLT	1	154749-			
89A	YZ9812151470	ｶﾞｽｹｯﾄ GASKET	1	154749-			
90A	YZ5157291230	ｽｸﾘｭｳ SCREW	1	154749-			
91A	YZ1157232840	ｶﾌﾟｾﾙ,ｽﾌﾟﾘﾝｸﾞ CAPSULE,SPRING	1	154749-			
94A	YZ1157795850	ｽｸﾘｭｳ SCREW	1	154749-			
96A	YZ5157290530	ﾌﾟﾗｸﾞ PLUG	1	154749-			
99A	YZ1157297300	ﾋﾟﾝ PIN	1	154749-			
101A	YZ8941445880	ｶﾞｽｹｯﾄ GASKET	2	154749-			
103A	YZ1157290920	ﾅｯﾄ,ｷｬｯﾌﾟ NUT,CAP	1	154749-			

SYM BOL	PART NUMBER	PART NAME	UNIT Q,TY	SERIAL (A) - (B)	REMARKS N P D	(A) (B)	(C) (D)	REMARK
105A	YZ8971385350	ﾚﾊﾞｰ LEVER	1	154749-				
106A	YZ9813250300	ｷｰ KEY	1	154749-				
107A	YZ9813254880	ﾜｯｼｬ WASHER	1	154749-				
108A	YZ1157293010	ｶﾗｰ COLLAR	1	154749-				
110A	YZ1157795760	ｼｰﾙ,ｵｲﾙ SEAL,OIL	1	154749-				
112A	YZ1157795730	ｶﾞｽｹｯﾄ GASKET	2	154749-				
113A	YZ9091854150	ﾘﾝｸﾞ,ｽﾅｯﾌﾟ RING,SNAP	2	154749-				
116A	YZ1157258820	ﾚﾊﾞｰ LEVER	1	154749-				
117A	YZ1157232600	ｽﾌﾟﾘﾝｸﾞ SPRING	1	154749-				
118A	YZ1157294640	ｶﾗｰ COLLAR	1	154749-				
119A	YZ1157292360	ﾅｯﾄ NUT	1	154749-				
120A	YZ1835794920	ﾜｯｼｬ,ｽﾌﾟﾘﾝｸﾞ WASHER,SPRING	1	154749-				
123A	YZ1096253100	ｼｰﾙ,ｵｲﾙ SEAL,OIL	2	154749-				
130A	YZ1157254110	ﾚﾊﾞｰ LEVER	1	154749-				
131A	YZ1157794970	ｽｸﾘｭｳ SCREW	1	154749-				
151A	YZ9019008180	ﾎﾞﾙﾄ(ﾜｯｼｬ ﾂｷ) BOLT,W/WASHER	1	154749-				
153A	YZ1157792190	ｶﾞｽｹｯﾄ GASKET	1	154749-				
154A	YZ1157795040	ﾎﾞﾙﾄ BOLT	1	154749-				
156A	YZ1835794920	ﾜｯｼｬ,ｽﾌﾟﾘﾝｸﾞ WASHER,SPRING	1	154749-				
157A	YZ5157290710	ﾎﾞﾙﾄ BOLT	1	154749-				
160A	YZ1157290150	ﾘﾝｸﾞ,O RING,O	1	154749-				
161A	YZ1157290380	ﾌﾟﾗｸﾞ PLUG	1	154749-				
175A	YZ1157254150	ﾚﾊﾞｰ LEVER	1	154749-				
196A	YZ8941677980	ﾌﾞﾗｹｯﾄ BRACKET	1	154749-				
209A	YZ1157130080	ﾀﾞｲｱﾌﾗﾑ DIAPHRAGM	1	154749-				
211A	YZ9884105250	ﾅｯﾄ NUT	1	154749-				
218A	YZ9884105250	ﾅｯﾄ NUT	1	154749-				
221A	YZ1157232610	ﾜｯｼｬ WASHER	1	154749-				
231A	YZ9813913050	ﾜｯｼｬ WASHER	1	154749-				
232A	YZ1157297320	ﾋﾟﾝ PIN	1	154749-				
239A	YZ1157297330	ｽｸﾘｭｳ SCREW	1	154749-				
248A	YZ1157297310	ﾛｯﾄﾞ,ﾌﾟｯｼｭ ROD,PUSH	1	154749-				
253A	YZ1157296360	ｷｬｯﾌﾟ CAP	1	154749-				
264A	YZ1157792220	ｺﾈｸﾀ CONNECTOR	1	154749-				
267A	YZ1157297290	ﾎﾞﾙﾄ BOLT	1	154749-				
295A	YZ1157791960	ﾘﾝｸﾞ,ｽﾅｯﾌﾟ RING,SNAP	1	154749-				

SYM BOL	PART NUMBER	PART NAME	UNIT Q,TY	SERIAL (A) - (B)	REMARKS N P D	(A) (B)	(C) (D)	REMARK
352A	YZ1157290930	ﾅﾅﾄ,ｷｬｯﾌﾟ NUT,CAP	1	154749-				
369A	YZ9813151910	ﾋﾟﾝ,ｽﾌﾟﾘｯﾄ PIN,SPLIT	2	154749-				
401A	YZ1157297340	ﾌﾞﾗｹｯﾄ BRACKET	1	154749-				
409A	YZ1157293380	ｼﾑ SHIM	1	154749-				
423A	YZ8972519160	ｼｬﾌﾄ SHAFT	1	154749-				
426A	YZ1157794640	ﾌﾞﾗｹｯﾄ BRACKET	1	154749-				
430A	YZ1157795070	ﾅﾅﾄ,ｷｬｯﾌﾟ NUT,CAP	1	154749-				
435A	YZ1157293250	ﾎﾞﾙﾄ,ｼﾞｮｲﾝﾄ BOLT,JOINT	1	154749-				
436A	YZ1156390090	ｶﾞｽｹｯﾄ GASKET	2	154749-				
437A	YZ1157236290	ｽﾌﾟﾘﾝｸﾞ SPRING	1	154749-				
465A	YZ9813217260	ﾘﾝｸ LINK	1	154749-				
504A	YZ8971796700	ｷｬｯﾌﾟ CAP	1	154749-				
505A	YZ1157795650	ｷｬｯﾌﾟ CAP	1	154749-				
509A	YZ1157290990	ｼﾑ SHIM	1	154749-				
510A	YZ9813251730	ｼﾑ SHIM	A/R	154749-				
517A	YZ9813250880	ｼﾑ SHIM	A/R	154749-				T=0.20
518A	YZ9813255510	ｼﾑ SHIM	A/R	154749-				T=0.30
519A	YZ9813255520	ｼﾑ SHIM	A/R	154749-				T=0.40
520A	YZ5157292860	ｼﾑ SHIM	A/R	154749-				T=0.50
521A	YZ9813255530	ｼﾑ SHIM	A/R	154749-				T=1.00
522A	YZ5157292870	ｼﾑ SHIM	A/R	154749-				T=1.50
523A	YZ1157298910	ｼﾑ SHIM	A/R	154749-				T=2.00
524A	YZ1157298920	ｼﾑ SHIM	A/R	154749-				T=3.00
525A	YZ1157298930	ｼﾑ SHIM	A/R	154749-				T=4.00
601A	YZ9019006160	ﾎﾞﾙﾄ(ﾜｯｼｬ ﾂｷ) BOLT,W/WASHER	1	154749-				
602A	YZ1156192820	ﾎﾞﾙﾄ BOLT	2	154749-				
603A	YZ5157291670	ﾎﾞﾙﾄ BOLT	1	154749-				
611A	YZ8972330850	ﾌﾞｯｼﾝｸﾞ BUSHING	1	154749-				
612A	YZ8972330860	ﾌﾞｯｼﾝｸﾞ BUSHING	1	154749-				
622A	YZ1157792300	ﾜｯｼｬ WASHER	A/R	154749-				T=0.50
623A	YZ1157792310	ﾜｯｼｬ WASHER	A/R	154749-				T=0.20
624A	YZ1157795780	ﾜｯｼｬ WASHER	A/R	154749-				
638A	YZ1157794590	ｼﾑ SHIM	A/R	154749-				
639A	YZ1157794600	ｼﾑ SHIM	A/R	154749-				
650A	YZ1157795820	ｱﾀﾞﾌﾟﾀ ADAPTER	1	154749-				
651A	YZ9813150650	ｱﾀﾞﾌﾟﾀ ADAPTER	1	154749-				

SYM BOL	PART NUMBER	PART NAME	UNIT Q,TY	SERIAL (A) - (B)	REMARKS N P D	(A) (B)	(C) (D)	REMARK
652A	YZ1157795660	ｱﾀﾞﾌﾟﾀ ADAPTER	1	154749-				
658A	YZ8972519140	ｶﾊﾞｰ COVER	1	154749-				
659A	YZ8971605890	ｶﾊﾞｰ COVER	1	154749-				
759A	YZ9019006160	ﾎﾞﾙﾄ(ﾜｯｼｬ ﾂｷ) BOLT,W/WASHER	3	154749-				
760A	YZ1156192820	ﾎﾞﾙﾄ BOLT	1	154749-				
761A	YZ1157795050	ﾎﾞﾙﾄ BOLT	3	154749-				
777A	YZ9091854040	ﾘﾝｸﾞ,ｽﾅｯﾌﾟ RING,SNAP	1	154749-				
778A	YZ1095881700	ﾘﾝｸﾞ,ｽﾅｯﾌﾟ RING,SNAP	1	154749-				
817A	YZ9813251810	ｼﾑ SHIM	A/R	154749-				
818A	YZ9813251990	ｼﾑ SHIM	A/R	154749-				T=0.50
819A	YZ1157297360	ｼﾑ SHIM	A/R	154749-				
911A	YZ5157590450	ｶﾞｽｹｯﾄ GASKET	2	154749-				
912A	YZ1157791290	ｶﾞｽｹｯﾄ GASKET	2	154749-				
928A	YZ5157290990	ｶﾞｽｹｯﾄ GASKET	2	154749-				
929A	YZ8942276020	ｶﾞｽｹｯﾄ GASKET	2	154749-				
931A	YZ9844100270	ﾅｯﾄ NUT	1	154749-				
932A	YZ1157299560	ﾅｯﾄ NUT	1	154749-				
933A	YZ1157795080	ﾅｯﾄ NUT	1	154749-				
934A	YZ1157297270	ﾅｯﾄ NUT	1	154749-				
935A	YZ1157290610	ﾅｯﾄ NUT	1	154749-				

MEMO

0-84	FEED PUMP; INJECTION PUMP
FIG-NO.	

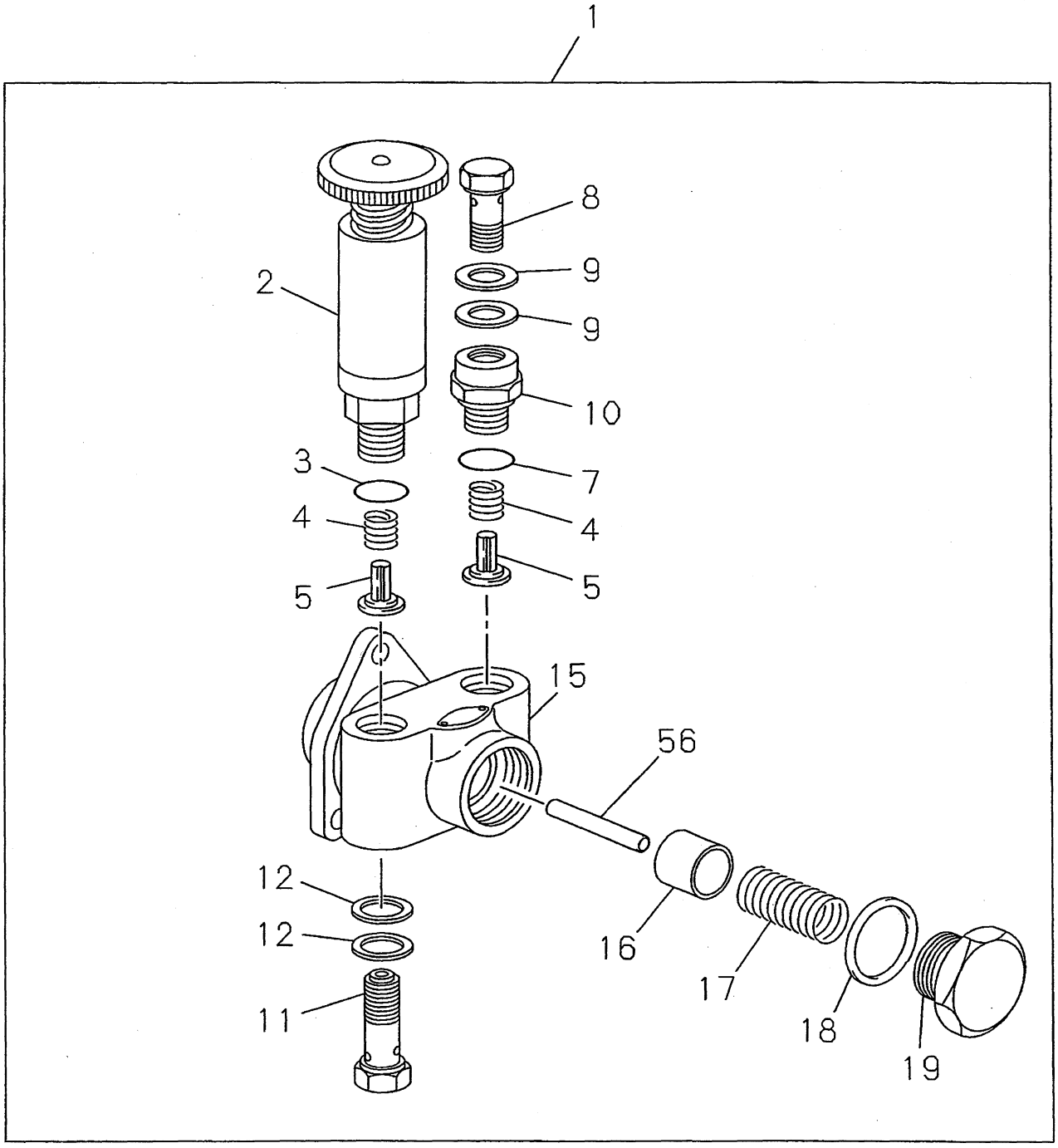

084A0110932

SYM BOL	PART NUMBER	PART NAME	UNIT Q,TY	SERIAL (A) - (B)	REMARKS N P D	(A) (B)	(C) (D)	REMARK
1A	YZ1157501970	ﾎﾟﾝﾌﾟ,ｲﾝｼﾞｪｸｼｮﾝ PUMP,INJECTION	1	154749-				YZ1157501910
2A	YZ1157610060	ﾎﾟﾝﾌﾟ,ﾌﾟﾗｲﾐﾝｸﾞ PUMP,PRIMING	1	154749-				
3A	YZ1196230160	ﾘﾝｸﾞ,O RING,O	1	154749-				
4A	YZ9813517020	ｽﾌﾟﾘﾝｸﾞ SPRING	2	154749-				
5A	YZ1157550020	ﾊﾞﾙﾌﾞ,ﾁｪｯｸ VALVE,CHECK	2	154749-				
7A	YZ1196230160	ﾘﾝｸﾞ,O RING,O	1	154749-				
8A	YZ1157590110	ﾎﾞﾙﾄ,ｼﾞｮｲﾝﾄ BOLT,JOINT	1	154749-				
9A	YZ1096300850	ﾊﾟｯｷﾝ PACKING	2	154749-				
10A	YZ1157590030	ｱﾀﾞﾌﾟﾀ ADAPTER	1	154749-				
11A	YZ8972039570	ﾎﾞﾙﾄ BOLT	1	154749-				
12A	YZ1096300850	ﾊﾟｯｷﾝ PACKING	2	154749-				
15A	YZ8971386470	ﾊｳｼﾞﾝｸﾞ HOUSING	1	154749-				
16A	YZ1157520010	ﾋﾟｽﾄﾝ PISTON	1	154749-				
17A	YZ8972144660	ｽﾌﾟﾘﾝｸﾞ SPRING	1	154749-				
18A	YZ1157590420	ｶﾞｽｹｯﾄ GASKET	1	154749-				
19A	YZ8941711850	ﾌﾟﾗｸﾞ PLUG	1	154749-				
56A	YZ8971159900	ﾛｯﾄﾞ,ﾌﾟｯｼｭ ROD,PUSH	1	154749-				

0-86	MISCELLANEOUS PARTS; INJECTION PUMP
FIG-NO.	

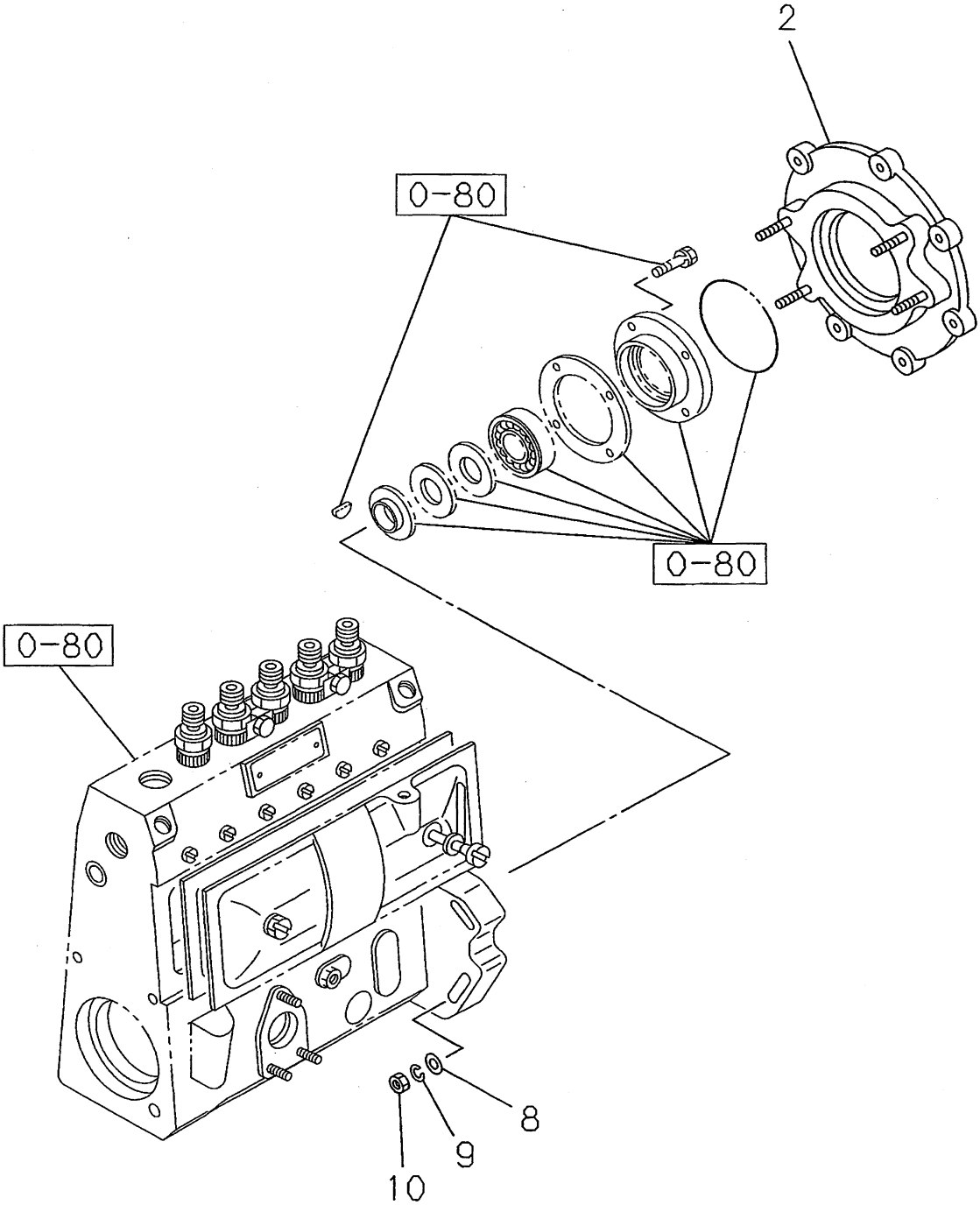

086A0110932

SYM BOL	PART NUMBER	PART NAME	UNIT Q,TY	SERIAL (A) - (B)	REMARKS N P D	(A) (B)	(C) (D)	REMARK
2A	YZ1156194890	ﾌﾞﾗｹｯﾄ BRACKET	1	154749-				
8A	YZ9091645100	ﾜｯｼｬ,ﾌﾟﾚｰﾝ WASHER,PLANE	4	154749-				
9A	YZ9091506100	ﾜｯｼｬ,ｽﾌﾟﾘﾝｸﾞ WASHER,SPRING	4	154749-				
10A	YZ5156390020	ﾅｯﾄ NUT	4	154749-				

0-87	COUPLING; INJECTION PUMP
FIG-NO.	(NO.1)

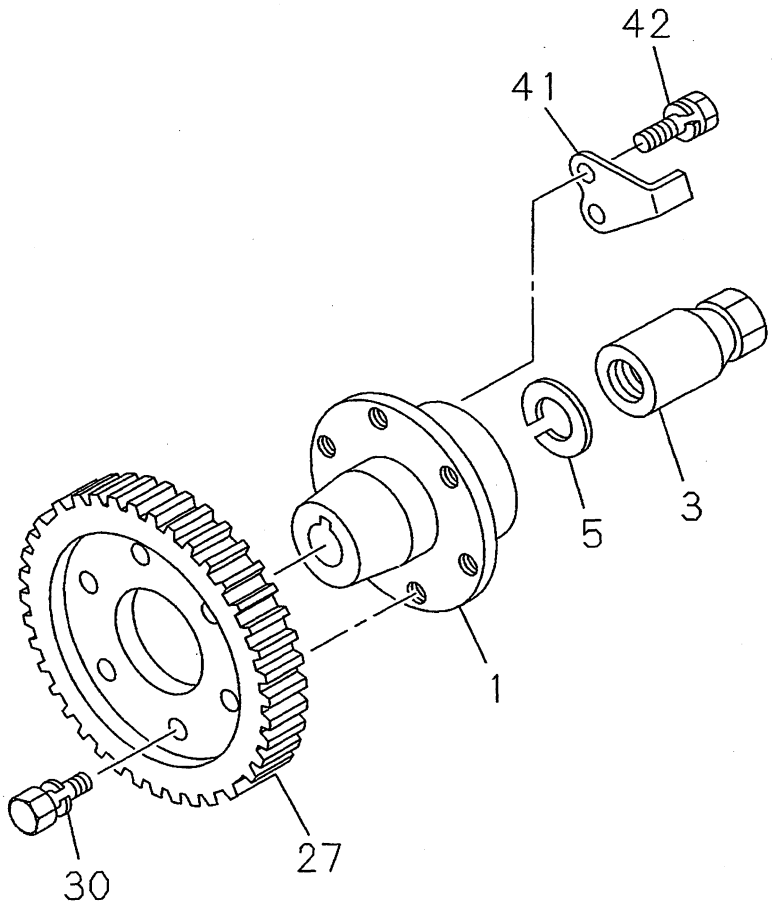

087A0110932

SYM BOL	PART NUMBER	PART NAME	UNIT Q,TY	SERIAL (A) - (B)	REMARKS N P D	(A) (B)	(C) (D)	REMARK
000A	YZ8973299400	ｶｯﾌﾟﾘﾝｸﾞ ｱｯｾﾝ COUPLING ASSY	1	154749-				
1A	YZ8971177760	ｶｯﾌﾟﾘﾝｸﾞ COUPLING	1	154749-				
3A	YZ1157491440	ﾅｯﾄ NUT	1	154749-				
5A	YZ1157491450	ﾜｯｼｬ WASHER	1	154749-				
27A	YZ5125240770	ｷﾞｱ GEAR	1	154749-				
30A	YZ8944575170	ﾎﾞﾙﾄ BOLT	6	154749-				
41A	YZ1157892160	ﾌﾟﾚｰﾄ PLATE	1	154749-				
42A	YZ9019106120	ﾎﾞﾙﾄ BOLT	2	154749-				

1-45	WATER SEDIMENTER; FUEL
FIG-NO.	(NO.1)

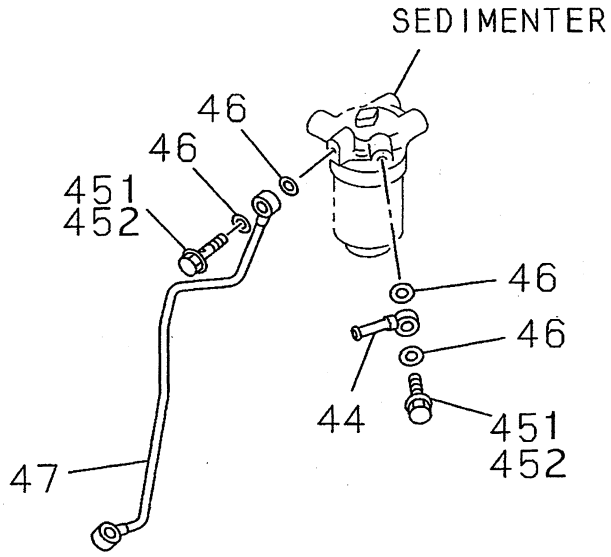

145A0110932

WATER SEDIMENTER; FUEL

(NO.2)

1-45

FIG-NO.

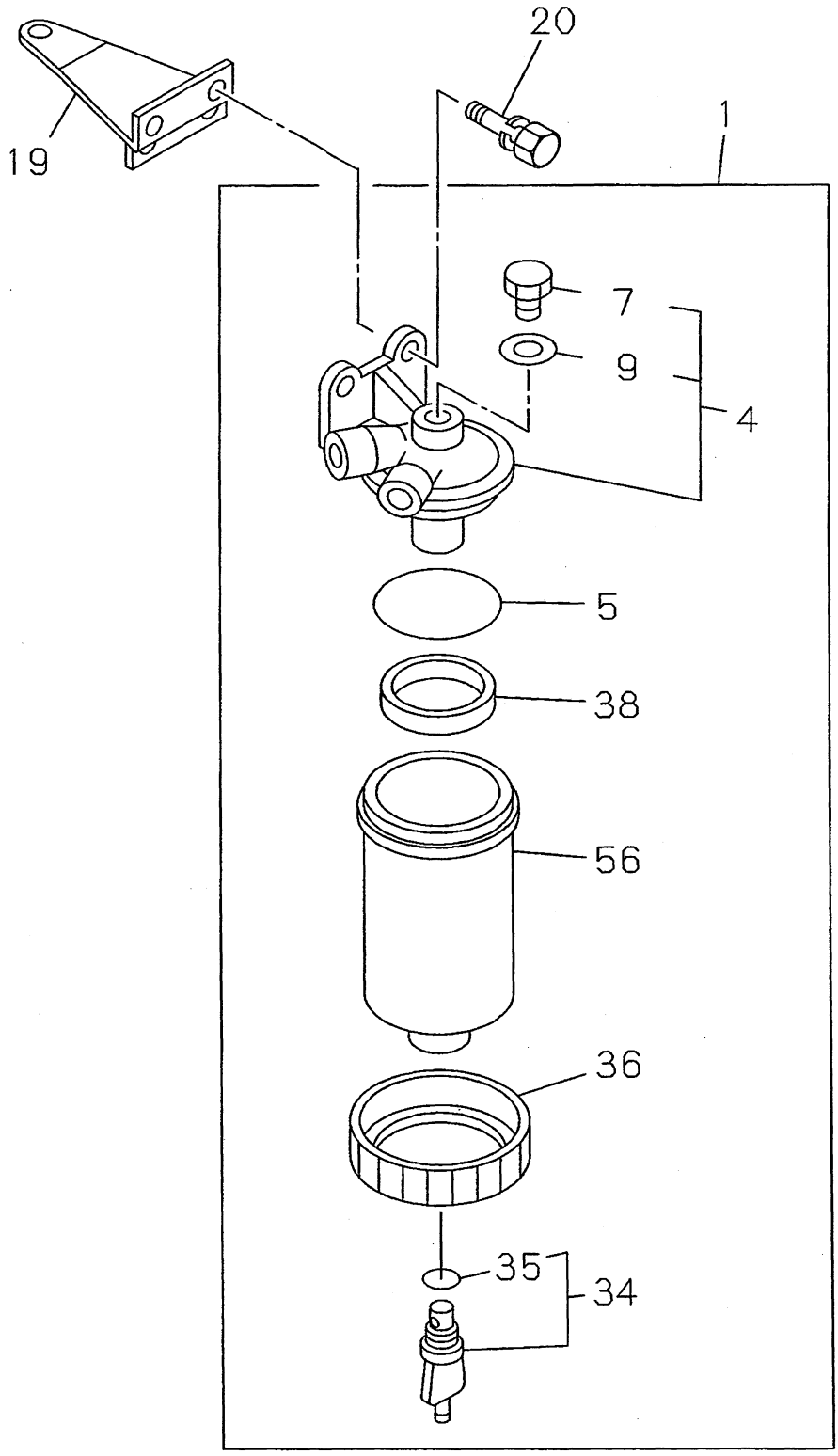

145A0210932

SYM BOL	PART NUMBER	PART NAME	UNIT Q,TY	SERIAL (A) - (B)	REMARKS N P D	(A) (B)	(C) (D)	REMARK
1A	YZ1132008410	ｾｼﾞﾒﾝﾀ ｱﾂｾﾝ,ｳｵｰﾀ SEDIMENTER ASSY,WATE	1	154749-		Y01		
4A	YZ1132121401	ｶﾊﾞｰ ｱﾂｾﾝ COVER ASSY	1	154749-		01 Y02		
5A	YZ5096230700	ﾘﾝｸﾞ,O RING,O	1	154749-		01		
7A	YZ5132190200	ﾎﾞﾙﾄ BOLT	1	154749-		02		
9A	YZ5096300240	ﾊﾟｯｷﾝ PACKING	1	154749-		02		
19A	YZ1197550941	ﾌﾞﾗｹｯﾄ BRACKET	1	154749-				
20A	YZ0280808250	ﾎﾞﾙﾄ,ﾌﾗﾝｼﾞ BOLT,FLANGED	2	154749-				M8X25
34A	YZ8944537460	ﾌﾟﾗｸﾞ PLUG	1	154749-		01	Y03	
35A	YZ8944163770	ﾘﾝｸﾞ,O RING,O	1	154749-			03	
36A	YZ5132190221	ﾘﾃｰﾅ RETAINER	1	154749-		01		
38A	YZ5132190210	ﾌﾛｰﾄ FLOAT	1	154749-		01		
44A	YZ5154112231	ﾊﾟｲﾌﾟ,ﾌｭｰｴﾙ PIPE,FUEL	1	154749-				
46A	YZ1096300850	ﾊﾟｯｷﾝ PACKING	4	154749-				
47A	YZ1154158840	ﾊﾟｲﾌﾟ,ﾌｭｰｴﾙ PIPE,FUEL	1	154749-				
56A	YZ1132112110	ｹｰｽ CASE	1	154749-		01		
451A	YZ1096750860	ﾎﾞﾙﾄ,ｼﾞｮｲﾝﾄ BOLT,JOINT	1	154749-				M14X27
452A	YZ1096750630	ﾎﾞﾙﾄ,ｼﾞｮｲﾝﾄ BOLT,JOINT	1	154749-				M14X27

PARTS INDEX

PART NUMBER	SEC-SYM	PART NUMBER	SEC-SYM	PART NUMBER	SEC-SYM	PART NUMBER	SEC-SYM
YZ0108060850	031 -442A	YZ1096040220	013 - 6A	YZ1122510320	015 - 85A	YZ1153430060	040 -138A
8060950	031 -441A	6050660	012 - 55A	3104700	015 - 1A	3491110	040 - 35A
8108600	040 - 71A	6050681	012 - 37A	3620031	015 - 93A	3491120	040 -140A
8110550	014 -207A	6230130	080 - 33A	3714880	015 - 56A	3491130	040 -141A
YZ0208014250	011 - 42A	6230530	080 - 48A	5140100	014 - 1A	3491140	040 -142A
YZ0280806120	020 - 58A	6231790	013 - 5A	5220162	014 - 9A	3491150	040 -143A
0808120	025 -361A	6234620	052 -472A	5511650	014 - 4A	3491160	040 -144A
0808120	052 - 44A	6234650	012 - 76A	5521110	014 - 5A	3491170	040 -145A
0808160	052 -138A	6253100	081 -123A	5610991	014 - 68A	3491180	040 -146A
0808250	145 - 20A	6254380	020 - 35A	5750360	014 - 88A	3491190	040 -147A
0808450	020 -361A	6300820	040 - 36A	6112490	014 - 78A	3491200	040 -148A
0808500	020 -622A	6300820	040 -135A	6210940	014 - 53A	3491210	040 -149A
0808500	052 -402A	6300830	052 -117A	YZ1131002040	051 - 1A	3491220	040 -150A
0810250	060 -261A	6300840	052 - 31A	1130470	051 - 11A	3491230	040 -151A
0810500	030 -243A	6300850	012 -271A	1190030	051 - 37A	3491240	040 -152A
0810700	030 -241A	6300850	041 - 30A	1230160	051 - 40A	3491250	040 -153A
0860140	050 - 76A	6300850	042 -110A	1280180	051 - 32A	3491260	040 -154A
0908900	033 - 24A	6300850	042 -115A	1400790	051 - 42A	3491270	040 -155A
6808200	020 -362A	6300850	042 -150A	1610120	012 -132A	3491290	040 - 45A
6808250	020 -621A	6300850	042 -217A	2007013	041 - 1A	3491570	040 - 47A
6808350	025 - 53A	6300850	080 -103A	2008410	145 - 1A	4124711	040 -133A
6808400	052 -401A	6300850	084 - 9A	2010630	050 -496A	4158440	042 -107A
6810200	011 - 41A	6300850	084 - 12A	2112110	145 - 56A	4158450	042 -119A
6810200	012 -462A	6300850	145 - 46A	2120871	041 - 21A	4158471	040 - 16A
6810250	051 - 29A	6301150	012 -269A	2121401	145 - 4A	4158481	040 - 17A
6810350	030 -242A	6370600	052 -150A	2400791	041 - 58A	4158491	040 - 18A
6810350	060 -262A	6500741	025 - 51A	2402321	050 - 2A	4158501	040 - 19A
6810400	033 - 86A	6601010	012 - 64A	2600011	042 -212A	4158512	040 - 20A
8914450	020 -212A	6750371	040 - 34A	2600470	041 - 29A	4158522	040 - 21A
YZ0500406300	042 -118A	6750371	040 -134A	3115322	052 - 62A	4158840	145 - 47A
0406300	042 -216A	6750630	145 -452A	3136030	052 -475A	4167630	042 -123A
0408180	013 - 23A	6750810	052 - 22A	3138742	052 -149A	6034980	040 - 1A
0408250	014 - 11A	6750860	012 -270A	3138980	052 - 63A	6112220	080 - 1A
0408250	020 -211A	6750860	042 -108A	3140150	052 - 37A	6120500	080 - 74A
0408400	052 -143A	6750860	042 -112A	3421320	012 - 56A	6190030	080 - 75A
0410200	040 - 78A	6750860	145 -451A	6310740	030 - 29A	6190920	080 - 88A
1408220	012 - 77A	6800240	012 -137A	6411870	030 - 7A	6191030	080 - 10A
1408250	031 - 50A	7001210	025 -360A	6420510	033 - 38A	6191590	080 -106A
1408280	025 - 13A	7400780	012 - 38A	6711430	033 - 36A	6191600	080 - 82A
1408280	050 -133A	8002140	015 - 37A	6741192	033 - 80A	6191620	080 - 71A
1408450	050 -132A	YZ1111109060	011 - 1A	6741610	033 - 81A	6191900	080 -127A
YZ0911502080	028 -101A	1411961	011 - 2A	7213412	012 -265A	6191910	080 -155A
1602140	020 -205A	1713581	010 - 1A	7430160	031 - 64A	6192640	080 - 77A
YZ1090001331	060 - 16A	1730590	010 - 69A	7700710	031 - 1A	6192820	081 -602A
0004692	012 - 8A	2104437	012 - 1A	YZ1141122093	025 - 1A	6192820	081 -760A
0005670	014 -751A	2191291	012 -135A	1126281	025 - 50A	6194880	080 -102A
0091141	033 - 71A	2613820	012 - 41A	1150590	025 - 10A	6194890	086 - 2A
0300910	050 -134A	2613830	012 - 42A	1211240	025 -359A	6211270	080 - 50A
0440470	051 - 97A	2613840	012 - 43A	1418042	027 - 1A	6220060	080 - 68A
0520181	012 -743A	2613850	012 - 44A	1451400	036 - 2A	6290020	080 -151A
0520221	012 -741A	2613860	012 - 45A	1491701	027 - 34A	6290030	080 -152A
0701001	011 -122A	2613870	012 - 46A	4003890	036 - 1A	6290040	080 - 49A
0701010	011 -121A	2613880	012 - 47A	4003890	037 -000A	6290040	080 -159A
1000390	037 - 45A	2613890	012 - 48A	4120090	037 -136A	6290070	080 -212A
1000400	037 - 42A	2810281	050 -110A	4141200	037 - 3A	6290080	080 -215A
1000410	037 - 18A	2820180	050 -111A	4141210	037 - 1A	6290090	080 - 51A
3000180	011 - 56A	2820281	050 -469A	4141220	037 - 7A	6290100	080 - 72A
3000761	012 -236A	2820290	050 -444A	4210300	037 - 5A	6290170	080 -160A
3001010	027 - 17A	2902541	012 -721A	4250420	037 - 44A	6290180	080 - 69A
3607820	036 - 98A	3210790	020 - 54A	4500710	037 - 6A	6290240	080 -111A
4000270	036 -112A	3220600	020 - 49A	4510730	037 - 2A	6291050	080 -214A
4000410	037 - 12A	3604392	013 - 1A	4530850	037 - 23A	6320580	080 - 19A
4001160	014 - 93A	3671320	013 - 16A	4530860	037 - 22A	6340070	080 - 63A
4400401	027 - 18A	5100743	015 - 7A	4530990	037 - 10A	6390030	080 -167A
4680021	042 -124A	6800013	015 - 42A	4531000	037 - 20A	6390090	081 -436A
5030331	036 -212A	7402711	028 - 1A	4550420	037 - 17A	6390220	080 - 62A
5030700	030 - 28A	7420602	028 - 93A	4550480	037 - 21A	6390230	080 - 64A
5803350	014 - 95A	7602802	013 - 2A	YZ1153004321	040 - 31A	6410310	080 - 14A
5881700	081 -778A	7662741	013 - 8A	3190360	040 -272A	6430140	080 - 9A
6000051	011 - 71A	YZ1121211460	015 - 68A	3301310	040 - 32A	6440090	080 - 6A
6000121	012 - 80A	2110332	015 - 83A	3420020	040 - 43A	6490050	080 - 8A
6000160	011 - 75A	2301291	015 - 84A	3420030	040 -243A	7130080	081 -209A
6000520	012 - 70A	2350271	015 - 86A	3430050	040 - 44A	7190930	080 - 89A

PART NUMBER	SEC-SYM	PART NUMBER	SEC-SYM	PART NUMBER	SEC-SYM	PART NUMBER	SEC-SYM
YZ1157212370	081 - 59A	YZ1157892160	087 - 41A	YZ5096230700	145 - 5A	YZ5156370030	080 -109A
7213490	081 - 7A	YZ1196230160	084 - 3A	6250550	030 - 16A	6390020	086 - 10A
7220170	081 - 12A	6230160	084 - 7A	6300240	145 - 9A	7230880	081 - 71A
7231860	081 - 41A	7511750	040 - 80A	6660021	012 -268A	7231600	081 - 24A
7232600	081 -117A	7550941	145 - 19A	7040313	028 -242A	7290270	081 - 3A
7232610	081 -221A	YZ1217002492	050 -102A	7040460	031 - 17A	7290340	081 - 15A
7232840	081 - 91A	YZ1811001892	060 - 1A	7040541	052 - 48A	7290530	081 - 96A
7236290	081 -437A	1001892	065 -000A	7091030	042 -171A	7290540	081 - 8A
7254110	081 -130A	1130810	065 - 8A	7091030	042 -251A	7290710	081 -157A
7254130	081 - 21A	1130820	065 - 12A	7091040	042 -172A	7290990	081 -928A
7254150	081 -175A	1150690	065 - 57A	7091040	042 -252A	7291230	081 - 90A
7258820	081 -116A	1150700	065 - 23A	7380010	015 - 31A	7291670	081 -603A
7290150	081 -160A	1160420	065 - 20A	8000500	030 -102A	7292860	081 -520A
7290380	081 -161A	1160430	065 - 50A	8000510	030 -101A	7292870	081 -522A
7290610	081 -935A	1160440	065 - 15A	8430030	051 - 41A	7293720	081 - 18A
7290920	081 -103A	1170140	065 - 21A	YZ5112190140	012 -113A	7590450	081 -911A
7290930	081 -352A	1180360	065 - 22A	2190150	011 - 73A	YZ5196190490	081 - 13A
7290990	081 -509A	1210370	065 - 16A	2570011	012 -130A	7110312	060 - 19A
7292360	081 -119A	1230240	065 - 10A	2880010	050 -192A	7320012	011 -110A
7293010	081 -108A	1230250	065 - 2A	3110113	020 - 1A	7320022	011 -111A
7293160	081 - 27A	1270310	065 - 28A	3210090	020 - 57A	YZ5811180190	065 - 63A
7293250	081 -435A	1291840	065 - 80A	3270090	020 -275A	1220160	065 - 54A
7293380	081 -409A	1291850	065 - 29A	7110280	011 - 52A	1291420	065 - 4A
7294640	081 -118A	1291960	065 -172A	7210010	011 - 4A	1291440	065 - 5A
7296360	081 -253A	1292990	065 - 74A	7490321	028 - 94A	1291450	065 - 6A
7297270	081 -934A	1293840	065 - 78A	7770551	011 -168A	1291460	065 - 60A
7297290	081 -267A	1293860	065 - 9A	YZ5123310646	015 - 12A	1291470	065 - 30A
7297300	081 - 99A	1293870	065 -271A	3360081	015 - 38A	1291480	065 - 61A
7297310	081 -248A	1293890	065 - 14A	3620031	015 - 96A	1291490	065 - 65A
7297320	081 -232A	1293960	065 - 19A	5240770	087 - 27A	1291500	065 - 59A
7297330	081 -239A	1293970	065 - 3A	5350011	014 -111A	1291510	065 -642A
7297340	081 -401A	1294380	065 - 1A	5630010	014 -712A	1291550	065 -171A
7297360	081 -819A	2005303	060 - 2A	5650060	014 - 65A	1291560	065 - 18A
7298910	081 -523A	2005303	066 -000A	5710033	014 - 89A	1291580	065 -213A
7298920	081 -524A	2111290	066 - 22A	6280120	014 - 58A	1291590	065 -212A
7298930	081 -525A	2120160	066 - 23A	YZ5131210050	051 - 20A	1291600	065 -211A
7299560	081 -932A	2131010	066 - 17A	1250010	051 - 8A	1292140	065 -272A
7299600	080 - 73A	2143670	066 - 1A	1650040	051 - 2A	1510360	065 - 31A
7301270	081 - 1A	2211020	066 - 2A	2190200	145 - 7A	YZ5878143200	030 - 4A
7491440	087 - 3A	2221301	066 - 19A	2190210	145 - 38A	YZ8941075751	015 -126A
7491450	087 - 5A	2291140	065 - 77A	2190221	145 - 36A	1077132	052 - 23A
7501970	084 - 1A	2297670	066 -127A	6340020	030 - 11A	1145790	014 -711A
7520010	084 - 16A	2297680	066 - 36A	6390010	030 - 8A	1289280	080 -113A
7550020	084 - 5A	2297690	066 -301A	6420072	030 - 25A	1339373	014 -112A
7590030	084 - 10A	2297700	066 -302A	YZ5153150030	040 - 66A	1376820	028 -232A
7590110	084 - 8A	2297710	066 - 16A	4112231	040 -121A	1445880	081 -101A
7590420	084 - 18A	2297720	066 - 27A	4112231	145 - 44A	1480790	012 - 30A
7610060	084 - 2A	2298320	066 - 43A	6190010	080 -289A	1677980	081 -196A
7790940	081 - 11A	2298330	066 - 10A	6190020	080 -291A	1711100	080 - 80A
7791060	081 - 5A	2600170	066 - 6A	6190030	080 -293A	1711850	084 - 19A
7791290	081 -912A	9002260	060 -488A	6190040	080 -295A	2059861	050 -131A
7791960	081 -295A	9091010	060 -554A	6190050	080 -297A	2276020	081 -929A
7792190	081 -153A	YZ1824100082	060 - 56A	6190070	080 -299A	3169910	036 -143A
7792220	081 -264A	5130431	011 - 10A	6190080	080 -301A	3675301	012 -742A
7792300	081 -622A	5530391	060 -646A	6190090	080 -303A	3706610	030 - 3A
7792310	081 -623A	YZ1835794920	081 -120A	6190100	080 -305A	3706710	020 - 32A
7794590	081 -638A	5794920	081 -156A	6190110	080 -288A	3706750	040 - 85A
7794600	081 -639A	YZ1878122712	005 - 2A	6190120	080 -290A	3906410	052 -147A
7794640	081 -426A	8123112	005 - 1A	6190130	080 -292A	3931320	015 - 35A
7794820	081 - 40A	8124850	012 - 21A	6190150	080 -294A	4046100	027 - 2A
7794970	081 -131A	8124860	012 - 22A	6190250	080 -281A	4163770	145 - 35A
7795040	081 -154A	8124870	012 - 23A	6190260	080 -282A	4537460	145 - 34A
7795050	081 -761A	8124880	012 - 24A	6190270	080 -284A	4575170	087 - 30A
7795070	081 -430A	YZ5093000231	012 - 82A	6190340	080 -283A	4838971	033 - 1A
7795080	081 -933A	3000290	025 -226A	6190350	080 -285A	YZ8970157541	012 -267A
7795650	081 -505A	5800920	050 -191A	6190360	080 -287A	0233390	012 - 34A
7795660	081 -652A	5800980	051 - 5A	6190370	080 -286A	0242380	081 - 45A
7795730	081 -112A	6000130	011 - 74A	6191060	080 -307A	0276011	020 - 65A
7795740	081 - 63A	6050050	031 -112A	6191070	080 -309A	0376860	011 - 51A
7795760	081 -110A	6050170	050 -193A	6191080	080 -304A	0638230	081 - 37A
7795780	081 -624A	6230020	013 - 9A	6191090	080 -306A	0728231	020 -175A
7795820	081 -650A	6230350	012 - 35A	6191100	080 -308A	0849890	080 -114A
7795850	081 - 94A	6230600	014 -100A	6250010	080 -176A	0849910	080 -261A

PART NUMBER	SEC-SYM	PART NUMBER	SEC-SYM	PART NUMBER	SEC-SYM	PART NUMBER	SEC-SYM
YZ8970849920	080 -262A	YZ9091114100	050 -115A	YZ9126160420	014 - 81A		
0849930	080 -263A	1115080	014 - 83A	6260050	014 - 55A		
0849940	080 -264A	1505060	081 - 9A	6281050	014 - 84A		
0849950	080 -265A	1505080	025 - 22A	YZ9131190100	051 - 39A		
0849960	080 -266A	1505080	033 -122A	2630100	050 -189A		
0849970	080 -267A	1505080	040 - 3A	YZ9153390510	040 - 54A		
0849980	080 -268A	1505080	040 - 60A	4196120	040 -114A		
0849990	080 - 46A	1505100	014 -103A	4196130	040 - 98A		
0850000	080 - 45A	1505100	031 - 47A	4196140	040 -115A		
0850010	080 -112A	1505100	041 - 63A	YZ9812151150	080 - 79A		
1159900	084 - 56A	1505100	041 - 99A	2151440	080 -148A		
1177760	087 - 1A	1505120	033 - 68A	2151470	081 - 89A		
1201670	014 - 72A	1505120	060 -292A	2151850	080 - 70A		
1216200	080 -269A	1505140	011 -117A	2250430	080 -161A		
1379101	015 - 28A	1505140	060 - 18A	2250490	080 -207A		
1385350	081 -105A	1506100	086 - 9A	2250500	080 -208A		
1386470	084 - 15A	1605080	025 - 23A	2250510	080 -209A		
1605890	081 -659A	1605080	040 - 4A	2250520	080 -210A		
1632260	031 - 49A	1605080	050 -107A	2250530	080 -211A		
1781340	066 - 86A	1605100	031 - 48A	2250540	080 -213A		
1796700	081 -504A	1605100	041 - 64A	2250570	080 -177A		
2039570	084 - 11A	1605140	060 - 17A	2315230	080 - 58A		
2144660	084 - 17A	1607100	040 - 75A	2350030	080 -178A		
2221041	012 -723A	1607120	033 - 69A	2350170	080 -126A		
2225710	052 - 21A	1645100	050 -116A	2350420	080 -296A		
2242040	032 -132A	1645100	086 - 8A	2350430	080 -298A		
2242050	028 -231A	1646080	028 -123A	2350440	080 -300A		
2248641	031 - 2A	1647080	033 - 16A	2350450	080 -302A		
2290750	020 - 2A	1800190	014 - 51A	2350460	080 - 7A		
2322470	030 - 20A	1801520	030 - 92A	3150650	081 -651A		
2322480	030 - 19A	1854040	081 - 25A	3151910	081 -369A		
2322490	030 - 17A	1854040	081 -777A	3217260	081 -465A		
2322500	030 - 18A	1854150	081 -113A	3250300	081 -106A		
2330850	081 -611A	5245550	042 -145A	3250860	081 - 16A		
2330860	081 -612A	5622150	050 -190A	3250880	081 -517A		
2357881	025 - 7A	5714120	052 - 32A	3251730	081 -510A		
2357891	031 - 65A	5714160	020 -297A	3251810	081 -817A		
2451820	037 - 61A	5714160	031 - 27A	3251990	081 -818A		
2451830	037 - 4A	5720080	012 -179A	3252150	081 - 88A		
2498951	030 -117A	5720100	050 -321A	3253910	081 - 4A		
2519130	081 - 2A	6021480	014 -752A	3254880	081 -107A		
2519140	081 -658A	6300260	011 - 14A	3255510	081 -518A		
2519160	081 -423A	6600340	011 - 81A	3255520	081 -519A		
2530281	030 - 1A	8013340	015 - 40A	3255530	081 -521A		
2533621	031 -107A	8025390	040 - 99A	3517020	084 - 4A		
3010630	012 -722A	8301630	011 - 54A	3913050	081 -231A		
3299400	040 - 15A	8401071	015 - 13A	YZ9821161400	065 - 62A		
3299400	087 -000A	8420070	036 -111A	1161420	065 -641A		
3320350	081 - 23A	8440220	052 -110A	5300430	060 - 38A		
3585740	015 - 63A	8514300	014 - 76A	9322110	060 -293A		
3585750	015 - 64A	8514300	014 - 94A	YZ9844100270	081 -931A		
3633370	050 -542A	8514310	015 - 14A	YZ9884105250	081 -211A		
YZ9008130230	081 - 43A	8518503	014 - 8A	4105250	081 -218A		
YZ9019006160	081 -601A	8600190	012 -220A	YZ9920614280	014 - 21A		
9006160	081 -759A	9147010	012 -162A	YZ9944112350	020 -224A		
9008180	081 -151A	9152811	028 - 10A	YZ9991104120	033 - 70A		
9106120	087 - 42A	9155121	028 - 11A	1104120	060 - 7A		
YZ9030908200	030 - 65A	9156661	028 -241A	1104140	060 - 23A		
4906100	033 -110A	9211880	052 -471A	2023160	020 -298A		
YZ9041108250	011 - 9A	9521430	030 - 91A				
1308250	037 -127A	YZ9111291280	011 - 72A				
4110280	025 -225A	1296010	011 - 76A				
7310250	027 - 16A	1750110	010 - 75A				
YZ9080307130	014 - 14A	1790300	010 - 27A				
1040300	051 - 3A	1791050	010 - 68A				
1510180	012 - 83A	2246021	012 -136A				
1510180	020 - 38A	6810150	014 - 10A				
1512200	015 - 32A	6910480	014 -371A				
YZ9091104080	025 - 20A	6930350	014 -372A				
1104080	040 - 62A	7776121	011 - 12A				
1104100	040 - 79A	YZ9122716080	015 - 73A				
1104100	041 - 62A	3790450	015 - 15A				
1105100	041 - 72A	5310300	014 -107A				

株式会社 KCM

〒675－1113 兵庫県加古郡稲美町岡 2680 番地

KCM Corporation

2680 Oka Inami-cho Kako-gun, Hyogo 675-1113

不 許 複 製

All rights reserved, No copy allowed without written consent.

Printed in Japan

93306-00162